Workshop Dobby Loom
User's Manual

Figure 1 - 16" Workshop Dobby Loom

Figure 2 - 24" Workshop Dobby Loom

AVL Looms
2360 Park Avenue
Chico, CA 95928-6785
800 626-9615
530 893-4915
530 893-1372 (fax)
http:\\www.avlusa.com
e-mail: sales@avlusa.com

May 2018
Revision 1 Instructions

© Copyright 2018
All Rights Reserved Worldwide

Introductory Information 1
Safety 2
Introduction 4
WDL Specifications 4
Parts 5
Tools You Will Need 5
WDL Assembly 11
Assembly 12
Interchangeable Design Unit (IDU) 15
Beater 18
Treadles 21
Beams 23
Compu-Dobby® 28
Traveling with the WDL 31
Traveling With Your Workshop Dobby Loom 32
Using the WDL 37
Warping Section 38
Threading, Sleying, and Tying On 50
Weaving Procedures 53
Additional Loom Information 55
Loom Maintenance 56
Troubleshooting 57
The Fine Print 63
AVL Customer Service 64
AVL Warranties 64
Notice to Users in the European Union 65

INTRODUCTORY INFORMATION

SAFETY

Before Getting Started:

Please read the entire manual before using the loom.

Warnings:

WARNING:

EQUIPMENT SHOULD ONLY BE USED FOR TEXTILE MANUFACTURING. IF THE EQUIPMENT IS USED IN A MANNER NOT SPECIFIED BY THE MANUFACTURER, THE PROTECTION PROVIDED BY THE EQUIPMENT MAY BE IMPAIRED.

WARNING:

ELECTRICAL SHOCK HAZARD. DO NOT TAMPER WITH ELECTRICAL WIRES OR OPERATE THE LOOM WITH SAFETY PANELS OPENED OR REMOVED.

WARNING:

PINCH, CRUSH, AND FINGER CUT-OFF HAZARDS. DO NOT OPERATE THE LOOM WITH SAFETY PANELS OPENED OR REMOVED. DO NOT PLACE HANDS IN MOVING MECHANISMS OR SCISSORS.

WARNING:
EQUIPMENT PANELS ARE AWKWARD AND HEAVY. TO AVOID MUSCLE STRAIN OR INJURY, USE PROPER LIFTING TECHNIQUES AND A HELPER.

WARNING:
DO NOT POSITION EQUIPMENT IN A WAY TO BLOCK OR IMPEDE ACCESS TO DISCONNECTING DEVICES, EMERGENCY STOPS, OR ON/OFF BREAKER SWITCHES

WARNING:
USE OF CONDUCTIVE FIBER OR YARN ON OR AROUND THIS EQUIPMENT WILL VOID WARRANTY AND MAY DAMAGE EQUIPMENT.

WARNING:
THIS EQUIPMENT IS CLASSIFIED FOR LIGHT INDUSTRIAL ENVIRONMENT ONLY. OPERATION OF HIGH-CURRENT DRAW EQUIPMENT (EX. MIG WELDER) ON THE SAME ELECTRICAL CIRCUITS MAY CAUSE EQUIPMENT FAILURE.

Safety Features:

Covers and shielding separate weaver from moving components where pinch hazards exist. Do not reach under covers and shielding while the loom is operating.

INTRODUCTION

Congratulations on your purchase and welcome to the AVL family. Your Workshop Dobby Loom (WDL) is designed to provide you with years of enjoyable service. And, with your purchase, you are entitled to AVL's world class loom support. Please contact us with any questions at info@avlusa.com or 1-530-893-4915.

This manual provides setup and use information for all current WDL loom configurations, including:

- 16" weaving width (16" WDL)
- 24" weaving width (24" WDL)
- 8, 16, or 24 harness configurations
- Single or double Warp Beam configurations

Please read the entire manual before starting the assembly process. Also, please note which diagrams and sections are applicable to your loom.

WDL SPECIFICATIONS

Weaving Width	**16" (40.6 cm)**	**16" (40.6 cm)**	**24" (61 cm)**	**24" (61 cm)**
No. of Warp Beams	1	2	1	2
Height	43-1/2" (110.5 cm)	43-1/2" (110.5 cm)	43-1/2" (110.5 cm)	43-1/2" (110.5 cm)
Width	30-1/2" (77.5 cm)	30-1/2" (77.5 cm)	35-1/2" (90.2 cm)	35-1/2" (90.2 cm)
Depth	39" (99.1 cm)	46" (116.8 cm)	39" (99.1 cm)	46" (116.8 cm)
Weight	47 lbs. (22 KG)	53 lbs. (24.1 KG)	77 lbs. (35 KG)	83 lbs. (37.7 KG)

TOOLS YOU WILL NEED

1. Allen wrench (provided)
2. Socket wrench, with 7/16" socket
3. Wrench (7/16")
4. Philips screwdriver
5. Hammer (optional)

PARTS

Note:

Items marked with an asterisk (*) indicate that there will be an additional, identical item if you ordered a two-beam system.

(1) Hardware Bag

(2) Beater Legs

(1) Travel Straps with Handle

(1) Interchangeable Design Unit (IDU): harness pulley support, harnesses, and dobby	**Figure 3 - IDU**

(4) X-frame legs (left and right sets)	 **Figure 4 - X-Frame Legs (4)** **Note:** **The X-Frame Legs are marked A, B, C, and D. The holes for assembly are in different places on each one. If you ordered a two-beam system, you will have legs E and F in place of C and D. These legs are longer.**
(2) Center Braces	 **Figure 5 - Center Brace**
(1) Cross Brace, Birch hardwood plywood	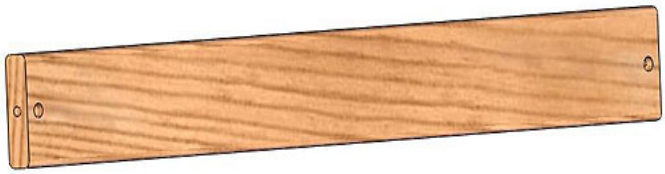 **Figure 6 - Cross Brace**
(1) Reed Assembly - includes Reed, Beater Top and Beater Race	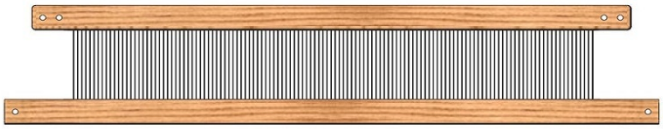 **Figure 7 - Reed Assembly**
(2) Treadles (left and right)	 **Figure 8 - Left (longer)**
	 Figure 9 – Right

(1) Treadle Rod and Stop Collars (8)	 **Figure 10 - Treadle Rod and Stop Collars**
(1) Cloth Beam with Ratchet	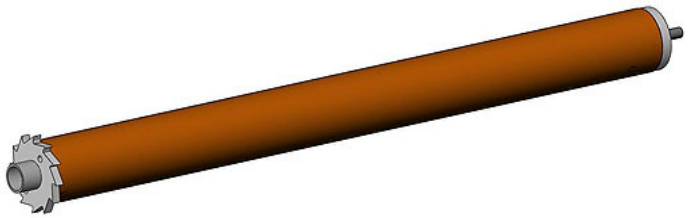 **Figure 11 - Cloth Beam with spacer on right**
(1) Cloth Storage Beam with Tie-On Rod and Attaching Cords	 **Figure 12 - Cloth Storage Beam** **Note:** **The Cloth Storage Beam comes standard only with the 24" WDL. If you ordered a 16" WDL, you will not receive a Cloth Storage Beam unless it was ordered as an option.**
(1) Cloth Beam Ratchet Handle, aluminum (1) Cloth Storage Beam Ratchet Handle, aluminum	 **Figure 13 - Ratchet Handle** **Note:** **You will only receive a Cloth Storage Beam handle if you received a Cloth Storage Beam.**

(1) Warp Beam with Brake Drum*	 **Figure 14 - Sectional / Plain Beam** **Note:** **To use as a sectional warp beam, insert metal hoops. To use as a plain beam, remove the metal hoops.**
(1) Warp Beam Handle, wood*	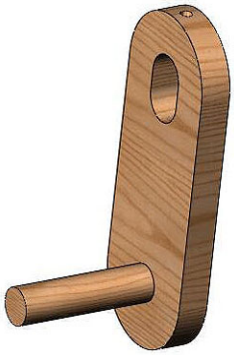 **Figure 15 - Warp Beam Handle**
(1) Tension Tie-Up Assembly for Warp Beam*	 **Figure 16 - Tension Tie-Up Assembly**
(1) Separation Beam, solid Ash hardwood*	 **Figure 17 - Separation Beam**

(1) Compu-Dobby® with Cables	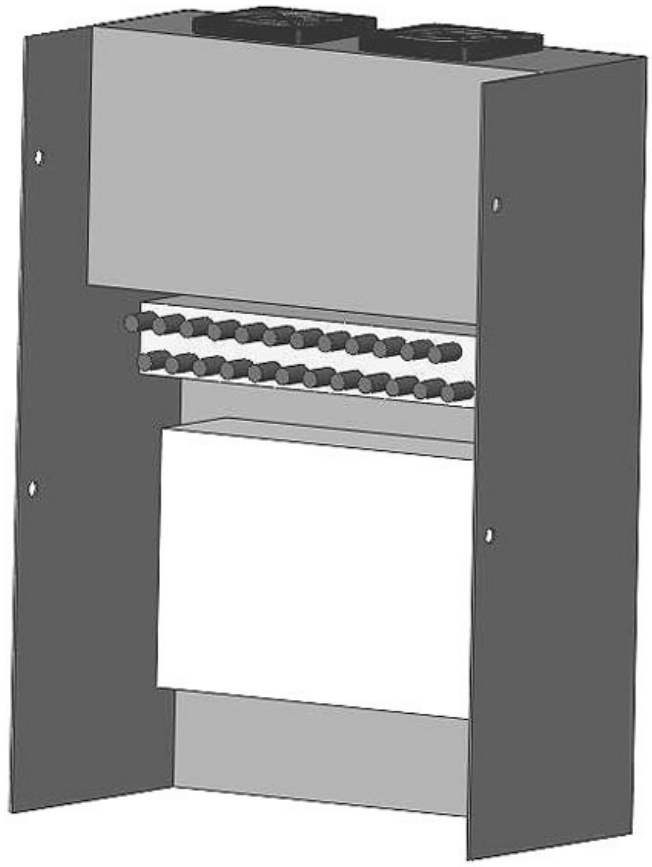 **Figure 18 - Compu-Dobby**

WDL ASSEMBLY

ASSEMBLE THE X-FRAME

X-Frame sides:

1) For the left side you will need legs A and B. If you are assembling the frame for the two-beam version, use legs B and E. Fit the legs together at the notch in the center

2) Slide a 2-1/2" carriage bolt from the outside through the center hole at the crossing of the legs.

Note:
The Cloth Beam Bracket is on the inside of the frame.

3) Slide a Center Brace onto the bolt. Install a washer and wing nut, and tighten to 'finger tight' condition.

4) Repeat this process for the remaining four holes using the 2 1/2" carriage bolts, washers and wing nuts to fully secure the Center Brace to the legs.

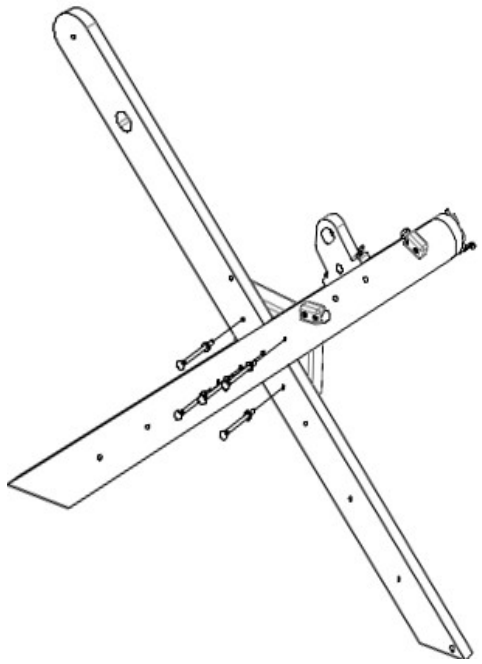

Figure 19 - X-Frame Bolts from Outside

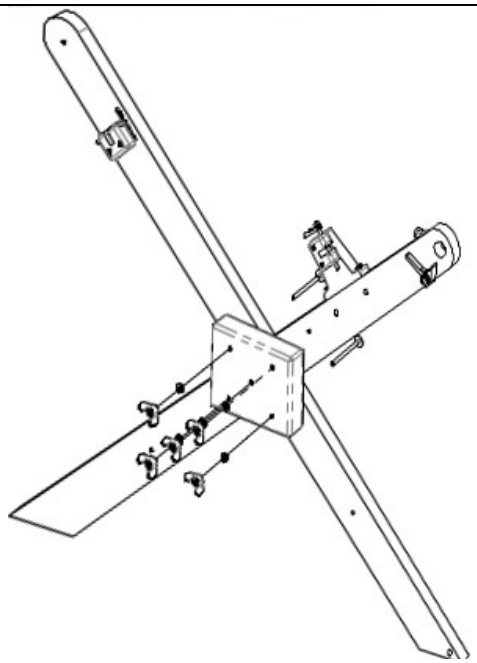

Figure 20 - X-Frame Bolts from Inside

5) Tap carriage bolt heads with a hammer until flush to the legs.

6) Repeat these steps for the right side using legs C and D. Use legs D and F for the two-beam frame.

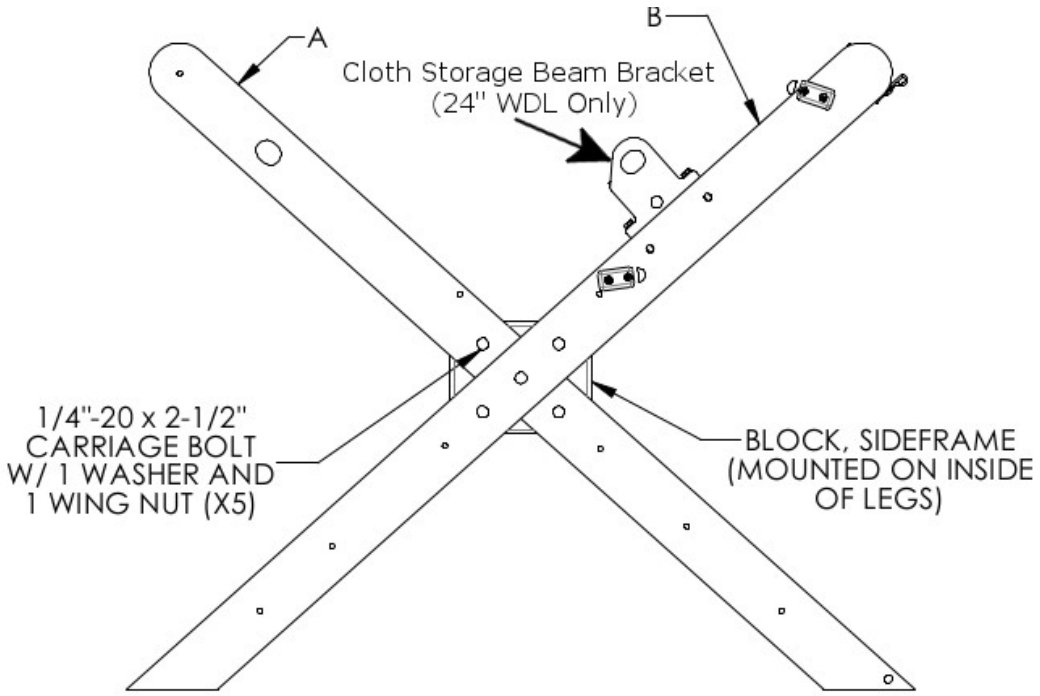

Figure 21 - X-Frame Outside (Left)

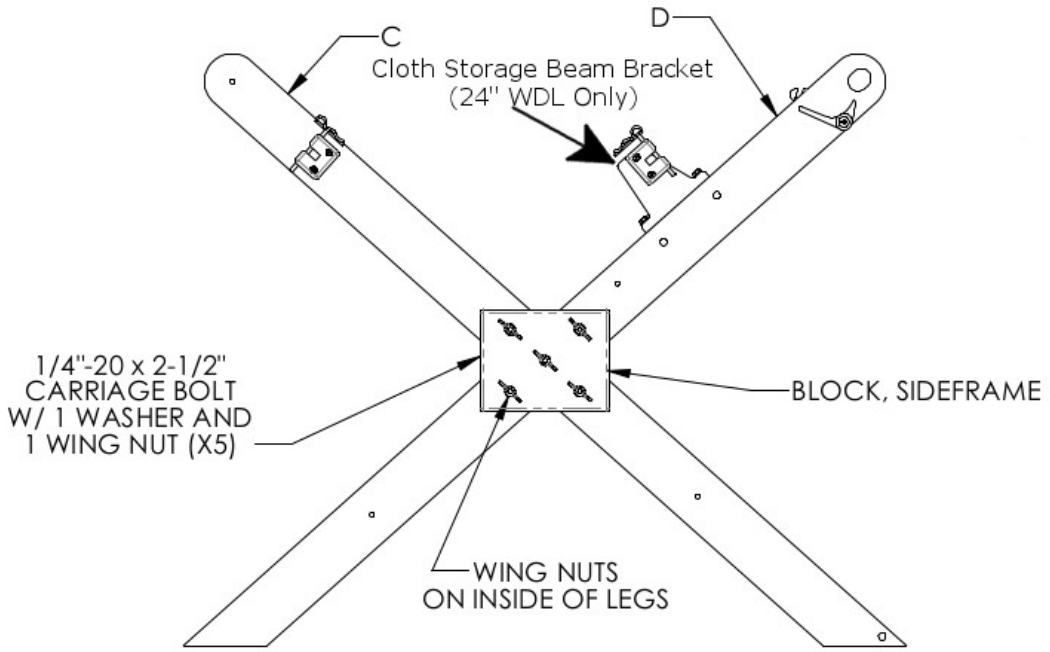

Figure 22 - X-Frame Inside (Right)

Cross Brace Installation

IMPORTANT:
The Cross Brace is plywood and should not be confused with the solid wood Separation Beam.

1) Attach the Cross Brace to the inside of the Right Side and secure with black thumbscrew (long) from the outside of the leg.

2) Stand the Left and Right Sides approximately 17" apart (for the 16" WDL) or 25" apart (for the 24" WDL) with Center Braces facing each other.

3) Secure the Cross Brace to the Left Side with a black thumbscrew (long) from the outside of the leg.

The X-Frame should now stand without support.

Figure 23 – X-Frame Cross Brace

INTERCHANGEABLE DESIGN UNIT (IDU)

Install the IDU

1) Set the IDU onto the Center Braces inside the X-Frame so that the Dobby is on the right side of the loom.

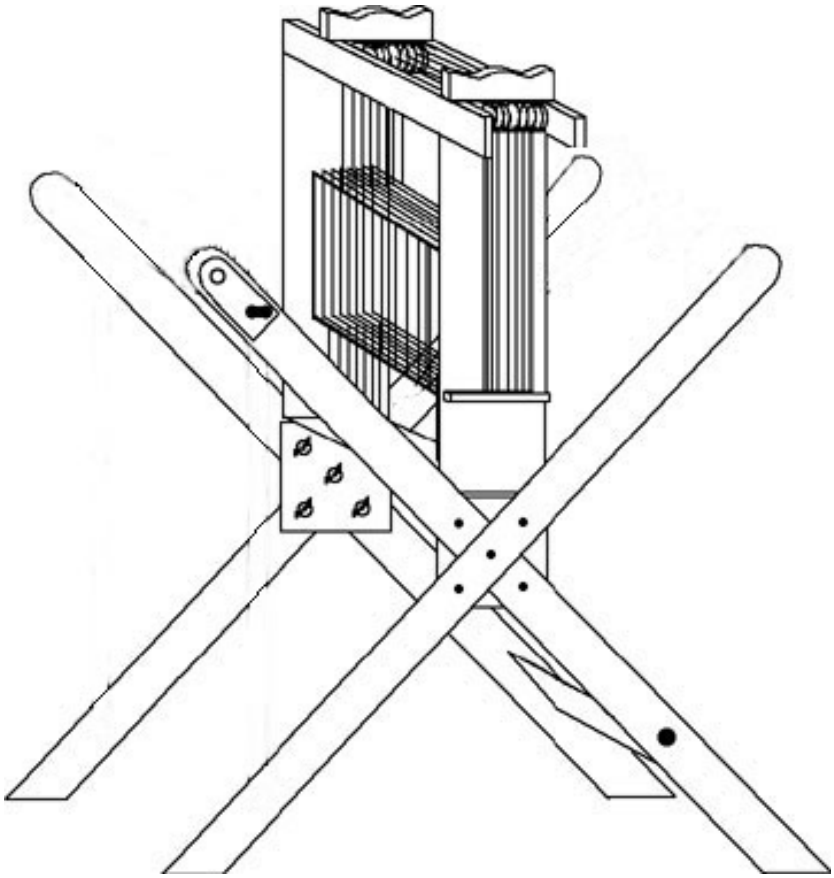

Figure 24 - WDL with IDU

2) Secure the IDU to the X-Frame using the (4) 2" carriage bolts, washers and wing nuts.

Note:
As before, the bolts are inserted from the outside through the X-Frame and through the IDU.

3) Tighten all the wing nuts so that the square part of the carriage bolt head sinks into the outside of the X-Frame.

NOTE:
A light tap with a hammer on the end of the bolt may be used to help seat the bolt.

HANGING THE HARNESSES ON THE IDU

Review the lay of the harness cables to make sure that they are arranged on their proper pulleys. Cable ends should hang freely over the pulleys and down inside the IDU.

Heddles:

You have been supplied with 25 heddles per harness plus 200 extra. You can purchase additional heddles from AVL. Heddles are shipped in bundles of 100.
You can divide the bundle of 100 heddles into smaller bundles to place on the harness. Without removing the original twist-ties, count out the number of heddles you want on the harness. Place a new twist-tie around each smaller bundle. Remove the original twist tie and cut the smaller bundles apart.

1) Insert an Eye Hook Retainer Tube over each harness cable loop and up above the crimped Nico. You will slide the eye hook retainer back down over the loop once it has been hooked onto the harness stick.

Figure 25 - Eyehook cover on Harness

2) Lay two harness sticks flat on a table or floor with the screw eyes facing away from each other.

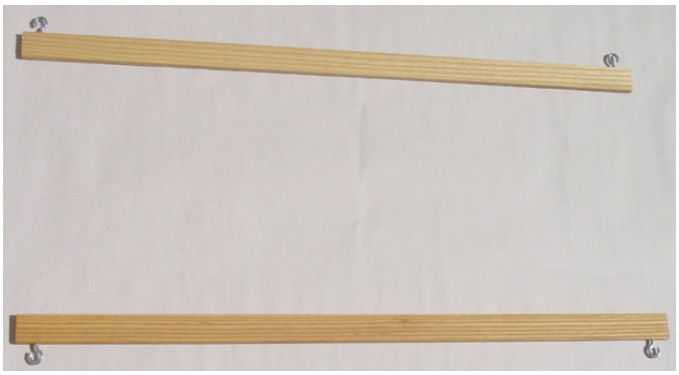

Figure 26 - Parallel Harness Sticks

3) Slide the top harness stick through the loop at one end of a heddle bunch, then slide the bottom harness stick through the opposite loop of the heddle bundle.

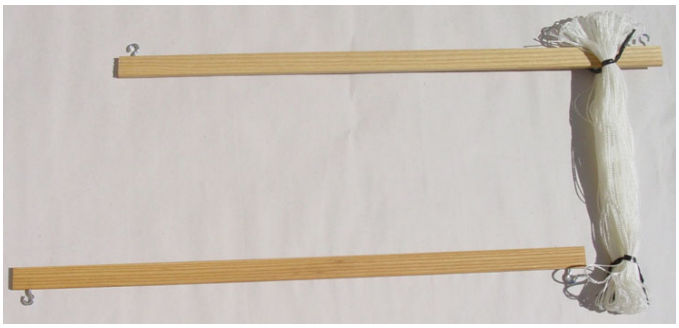

Figure 27 - Place heddle bundle on heddle sticks

4) Remove the ties on the bundles.

5) Now clip the loops of your heddles -- it is easier to cut the loops when your harnesses are off the loom. You now have one harness.

Figure 28 - Cut heddle loops

Hang the Harnesses

When hanging the harnesses, start at the rear most harness position and work forward.

1) Holding the top harness stick, lift the Harness and hook the left and right harness cables to the eyehooks on the top harness stick. The harness will hang from the IDU.

2) Attach the correct harness springs to the eyehooks on the bottom harness stick.

3) Repeat these steps for the remaining harnesses.

BEATER ASSEMBLY

The Reed Assembly (as typically delivered from the factory) is the Beater Top, Reed, and Race, pre-assembled and secured with strapping tape. The strapping tape should be removed before the Reed Assembly is attached to the Beater Legs. The WDL Beater Race faces the front of the loom. You will put together the Beater Assembly first, and then put it on the loom.

1) Locate the Beater Legs and Reed Assembly.

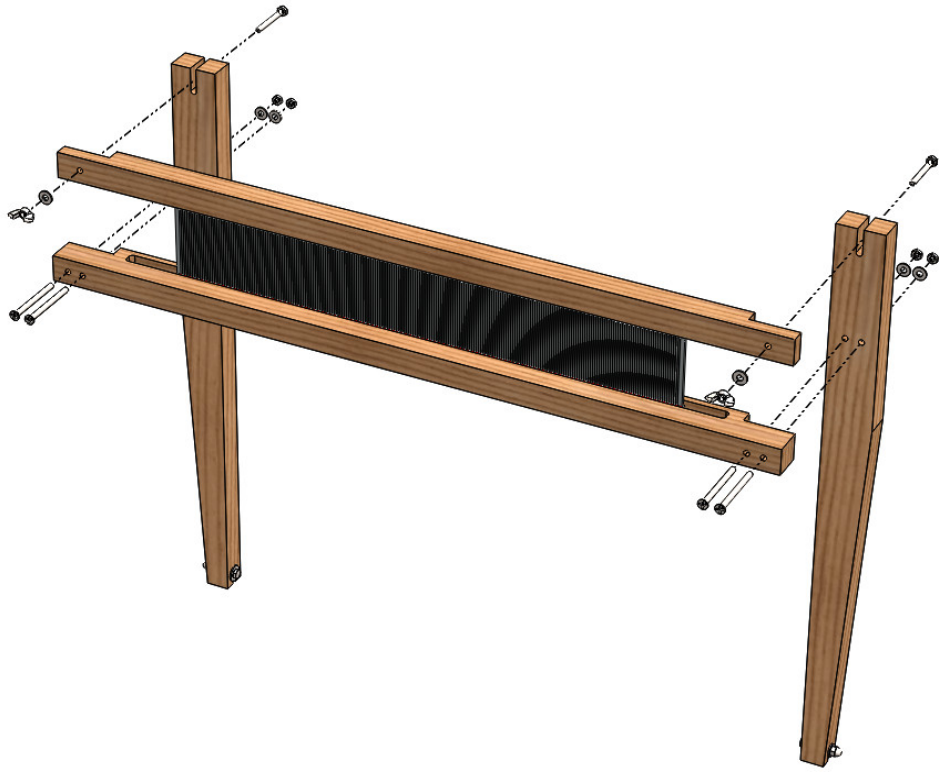

Figure 29 - WDL Beater

2) Each leg has a straight side and a tapered side. Place the legs so that the tapered side is to the outside.

3) Separate the Beater Top and Reed from the Race.

4) Place the Beater Race so that the cut-out sides lock around each leg and the holes are aligned.

5) Slide a carriage bolt through each of these holes from the front.

6) Insert a washer and secure with a nut. Do not tighten the nuts yet. Repeat for each hole on both sides.

7) Use a small square to make sure the Beater Race is square to the Beater legs. Adjust as needed before securing the bolts.

8) Set the Beater Top and Reed onto the Race with the cut-outs on the sides facing the legs.

9) Slide a bolt from the back of the beater through the slot in the leg, continuing through the hole in the Beater top.

10) Insert a washer and secure with a wing nut. Repeat for the other side.

To install or change the Reed:

1) Remove the wing nuts from the bolts holding the Beater Top to the Beater Legs.

2) Lift off the Beater Top.

3) Insert and seat the Reed into the Beater Bottom

4) Slide the Beater Top down and seat it on the Reed.

5) Re-install the hardware to secure the Reed.

NOTE:
If you have room, it is generally easier to transport the beater as a unit, rather than disassemble it.

To place the Beater Assembly on the loom:

1) Place a carriage bolt through the hole at the front bottom of the X-frame on each side.

2) Place a washer on each bolt.

3) Position the Beater Assembly on the loom so that the slot at the bottom of the legs is over the bolt on each side.

4) Place another washer and a nut on each bolt to hold the Beater Assembly to the loom.

5) When the beater is pushed back and pulled forward, both sides should hit the bumpers at the same time. If they do not, check that the beater is square. You may also need to adjust the tightness of the bolts holding the beater to the loom.

TREADLES

The metal Treadle Rod comes with eight stop collars. The inner-most two stop collars are pre-located for your convenience. They are *not* symmetrically placed on the Treadle Rod.

1) Remove the outer three stop collars on each side with the 1/8" Allen Wrench. The two inner stop collars are locked in the correct position for your loom.

2) Slide the Right Treadle (shorter treadle) onto the shorter end of the Treadle Rod with the Treadle Cable up.

3) Slide the Left Treadle (longer treadle) onto the longer end of the Treadle Rod with the Treadle Cable up.

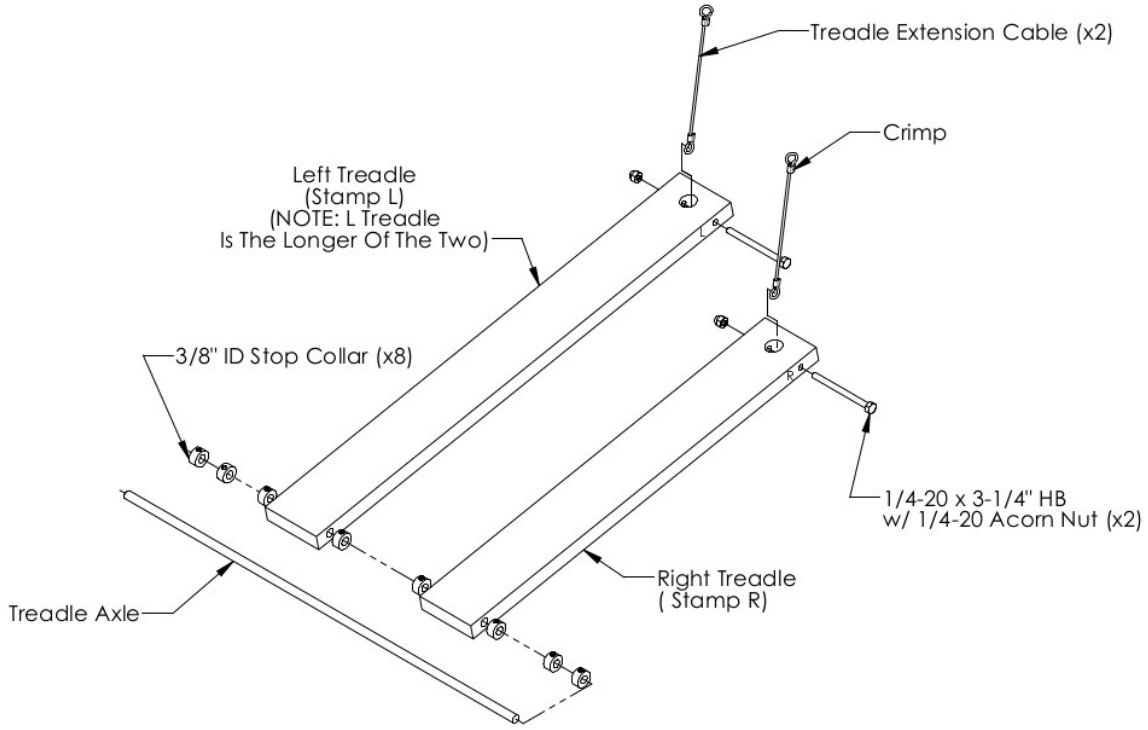

Figure 30 - Left and Right Treadles

4) Slide a stop collar onto each end of the rod and loosely position them next to the treadles.

5) Tighten the stop collar into place using an Allen Wrench. You now have the Treadle Assembly.

NOTE:

There should be enough space left between the stop collar and the treadle to avoid binding the treadle movement.

6) Place the Treadle Assembly under the front of the loom with Treadle Cables facing up and directly beneath the IDU.

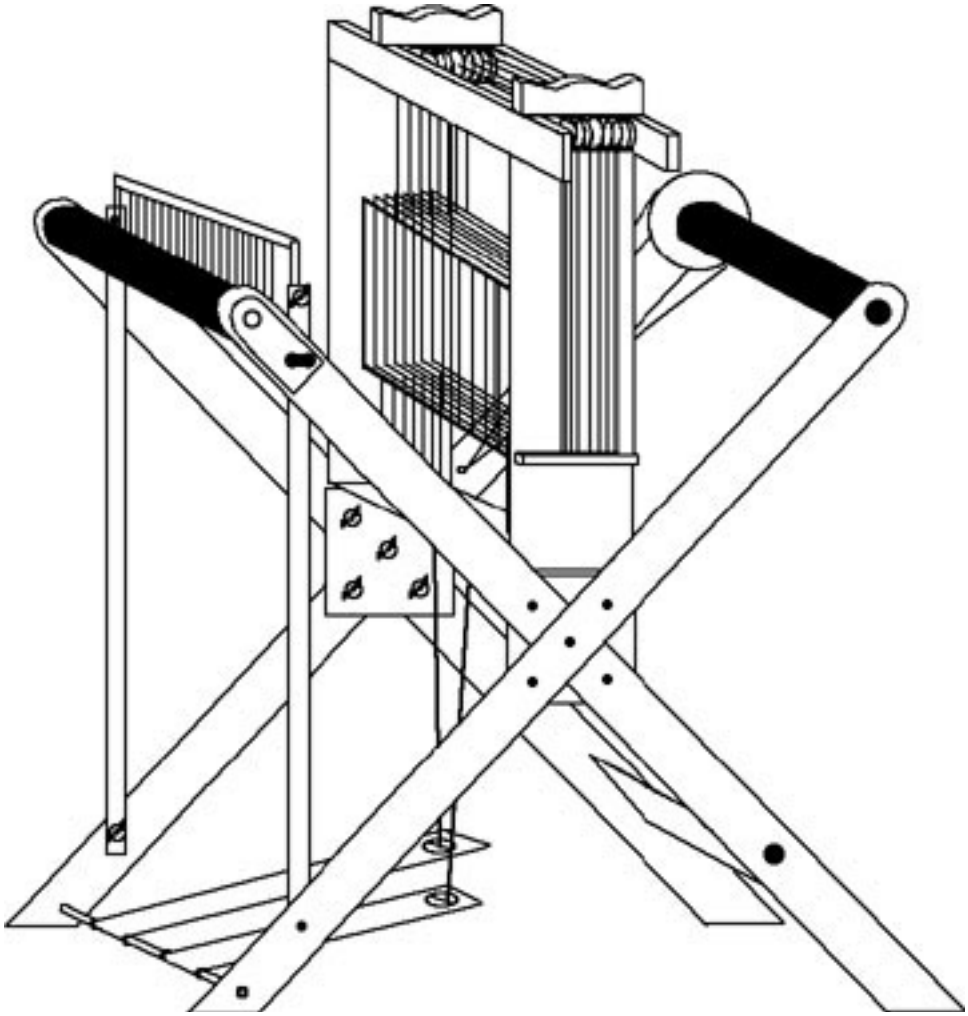

Figure 31 - WDL treadle positioning

7) Slide another stop collar on each side of the Treadle Assembly, and leave it loose for later adjustment.

8) Slide the left end of the rod into the hole on the lower front left X-Frame leg; slide the right end of the rod into the hole on the lower front right X-Frame leg.

9) Slide a stop collar onto each end of the rod. The X-Frame legs should be sandwiched by stop collars.

10) Adjust the four stop collars until they are snug against the X-Frame and tighten.

11) Unclip the cables from under the IDU.

12) Clip the left hanging cable from IDU to the left Treadle Cable and the right hanging cable from IDU to the right Treadle Cable.

13) These cables connect the treadles to the dobby.

Depressing the right Treadle raises the Harnesses. Depressing the left Treadle signals the Compu-Dobby® to advance to the next pick.

NOTE:

While rare, it has been noted that the Treadle Cable pulleys located inside the bottom shelf of the IDU can loosen during travel and/or very heavy weaving. It is a good practice to routinely check the pulley bracket screws for tightness and verify that the cable retainer brackets are seated flush on the pulley and the retaining bolts are also tight.

BEAMS

The Cloth Beam

The Cloth Beam (or sandpaper beam) with Ratchet is inserted in the front of the loom. For the 24" WDL, the upper position is used.

1) Place the Ratchet handle on the ratchet end of the beam.

2) Hold the Ratchet handle so it is horizontal while placing the beam on the loom. The long straight side of the handle should go to the front of the loom.

3) Slide the beam end with the ratchet into the hole on the right front frame leg.

4) Slide the other end of the beam into the Cloth Beam Retainer Bracket on the other leg.

5) Insert the retainer pin into the Cloth Beam Retainer Bracket and secure with a small pin.

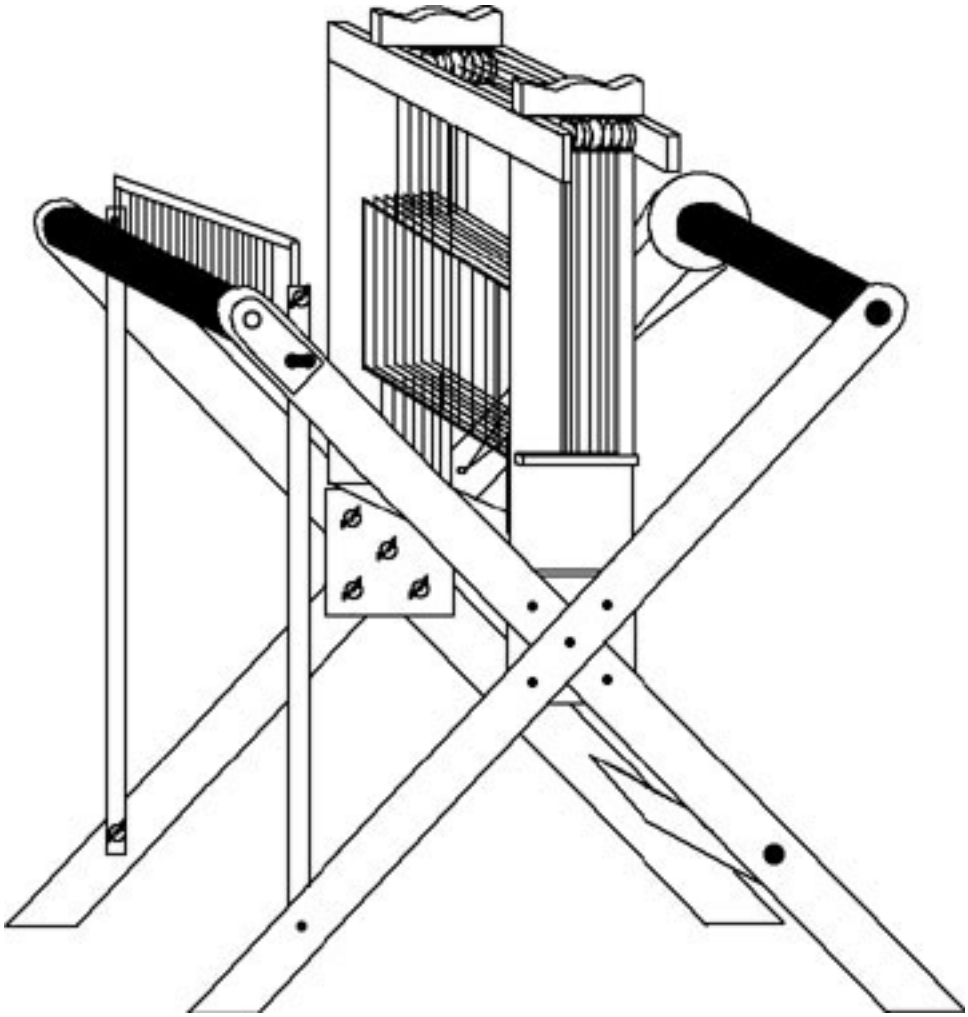

Figure 32 -WDL Beams

The Warp Beam

The Warp Beam goes on the back of the loom.

1) Slide the beam end with the brake drum into the hole on the back frame leg

2) Slide the other end of the beam into the Beam Retainer Bracket on the other leg.

3) Insert the retainer pin into the Beam Retainer Bracket and secure with a small pin.

4) Place a washer on the Tension Tie-Up Assembly eye-bolt.

5) From the inside of the X-Frame, insert the eye-bolt of the Tension Tie-Up Assembly into the hole near the IDU on the lower left leg of the X-Frame and secure with another washer and nut.

6) Wrap the Tension Tie-Up cord over and down the rear side of Warp Beam Brake Drum.

7) Wrap the cord around the drum twice working towards the center of the loom. The cord wraps counter-clockwise if you are looking at the drum from the left side of the loom.

8) Extend the cord back down to the eye-bolt and clip it on.

NOTE:
The cord should not overlap itself on the drum.

The Separation Beam

The Separation Beam is located at the upper rear of the X-Frame and is secured with Phillips-head screws.

IMPORTANT:
The Separation Beam is solid wood and should not be confused with the plywood Cross Brace.

1) Insert the Separation Beam between the upper rear members of the X-Frame

2) Secure with Phillips-head screws from the outside of the leg.

The Cloth Storage Beam (24" WDL Only)

The Cloth Storage Beam is inserted in the front, lower position on the X-Frame, just in front of the IDU. The Cloth Storage Beam is included with the 24" WDL only. It is available as an option for the 16" WDL.

1) Place the Ratchet handle on the ratchet end of the beam.

2) Hold the Ratchet handle so it is horizontal while placing the beam on the loom. The long straight side of the handle should go to the back of the loom.

3) Slide the beam end with the ratchet into the hole on the left front frame leg.

4) Slide the other end of the beam into the Beam Retainer Bracket on the other leg.

5) Insert the retainer pin into the Beam Retainer Bracket and secure with a small hair pin.

Two-Beam

The Two-Beam system has longer left and right legs that allow room for the additional beam. To switch to the two-beam system, disassemble the X-frame and reassemble it using the longer legs (E and F).

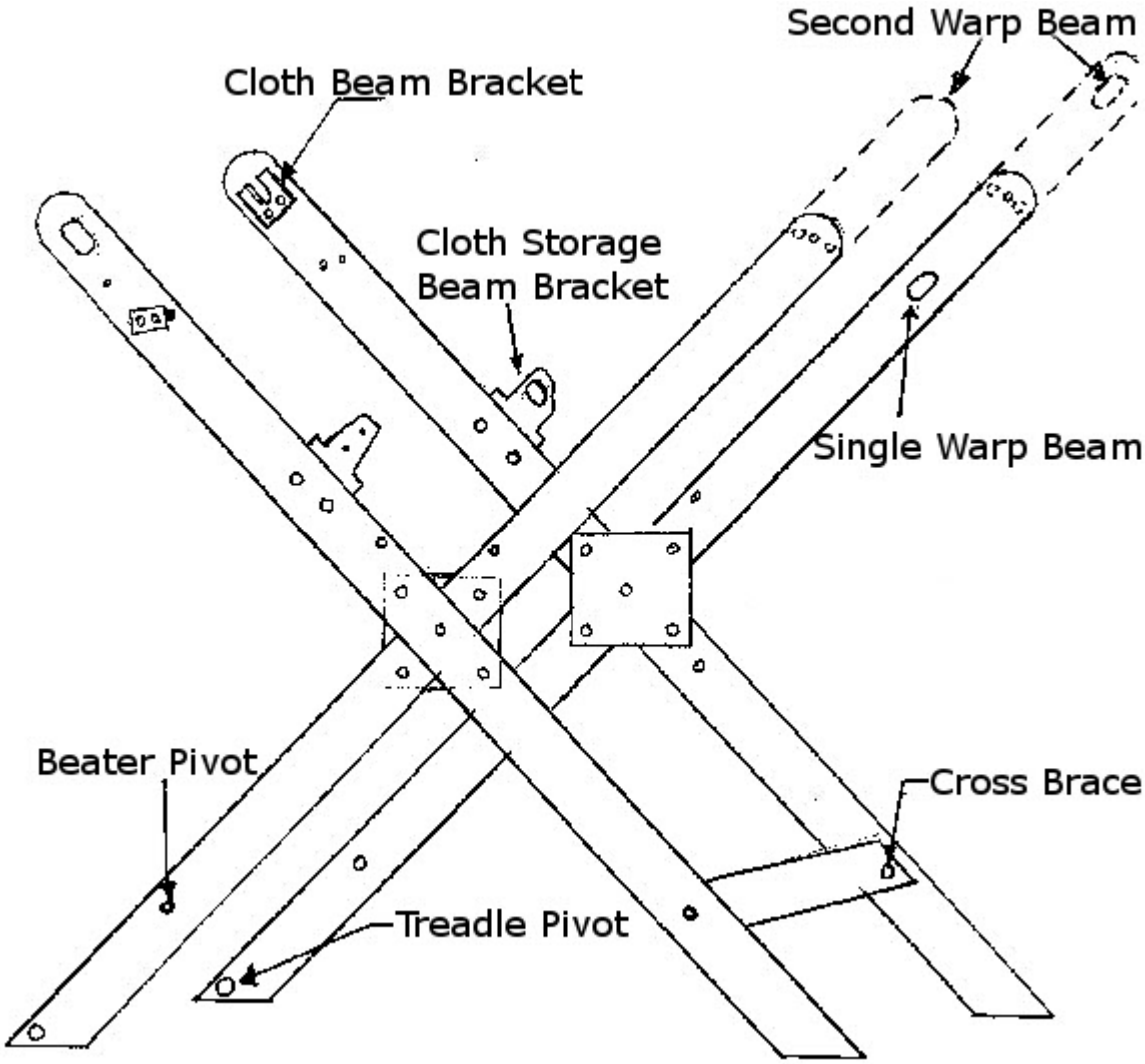

Figure 33 - WDL with two beams

1) Place the top warp beam into position as described earlier.

2) Place the lower warp beam into position.

3) Attach the tension tie-up assembly for the upper beam using the lower eye-bolt.

4) Attach the tension tie-up assembly for the lower beam using the upper eye-bolt.

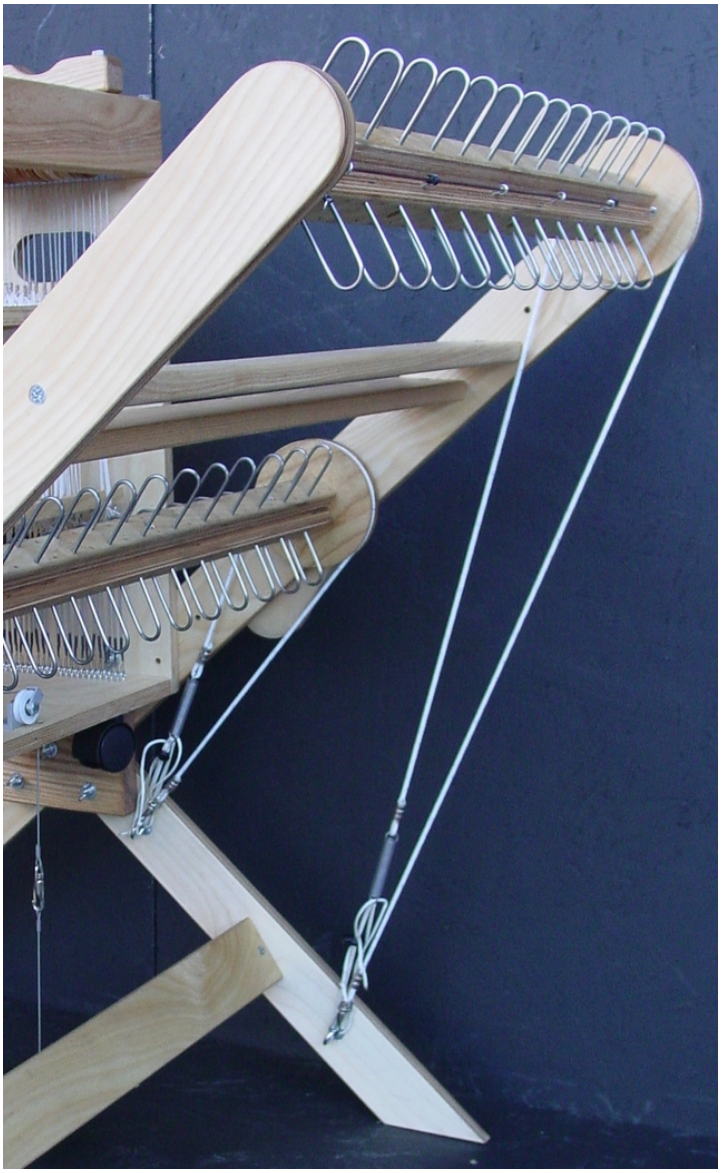

Figure 34 - WDL with two beams

5) Insert a separation beam for each warp beam. The upper Separation Beam is used for the upper beam and the lower Separation Beam is used for the lower beam.

COMPU-DOBBY®

The Compu-Dobby® is packed with a wood backing plate. This plate also serves as a tool tray when set upon the IDU. The Compu-Dobby is installed on the right side of the IDU.

1) On the loom, find the strap holding the dobby slide plate in place.

2) Cut the strap and remove it so that the Dobby Slide Plate moves freely.

Note:

When traveling with, or shipping, your loom, please strap the Dobby Slide Plate in place so that it cannot move.

3) Remove the wood backing plate from the Compu-Dobby by removing the 4 black thumbscrews (short).

4) Place the wood backing plate on the top of the IDU with the metal dowels facing down and inserted in the matching holes on the IDU.

NOTE:

Always travel or ship the Compu-Dobby with the wood backing plate in place to provide the best possible protection. Take care to save the barrel nuts inserted in the backing plate as these are used with the thumbscrews to hold the board to the Compu-Dobby.

5) Align each plastic solenoid tip in the Compu-Dobby such that the "U" or concave indentures of the tips aligns in a vertical orientation.

Figure 35 - Compu-Dobby Solenoids

NOTE:

In this orientation, the solenoid tips will cradle the Dobby Wires and ensure that the solenoids properly capture and engage the Dobby Wires.

6) While carefully avoiding jostling the solenoid tips from their orientation, place the Compu-Dobby onto the IDU, aligning the holes on the Compu-Dobby and the IDU, and secure with the 4 black thumbscrews (short).

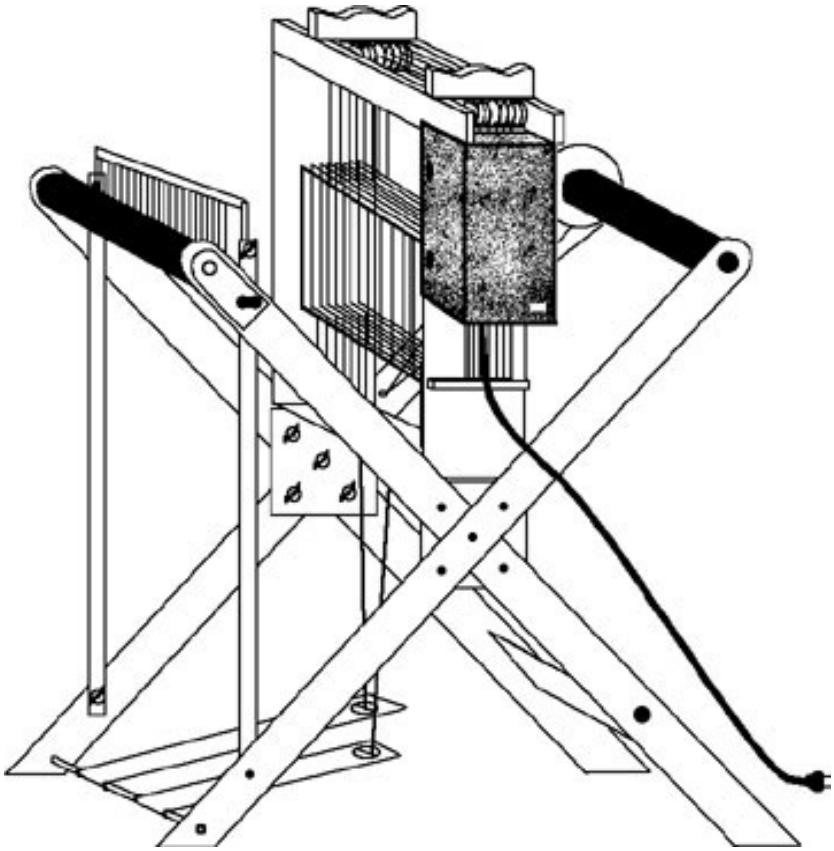

Figure 36 - WDL with Compu-Dobby

Connecting Your Compu-Dobby® To Your Computer

1) Plug the female end of the Compu-Dobby power cord into the Compu-Dobby.

2) Plug the male end of the Compu-Dobby power cord into your power source (wall outlet).

NOTE:
AVL strongly recommends that you use a surge protector with your Compu-Dobby.

3) Attach the USB cable between the Compu-Dobby and your computer.

Loom Software

Many software providers have developed drivers for the AVL Compu-Dobby. Make sure the software you choose will correctly run your Compu-Dobby version and number of harnesses.

AVL offers a feature rich design and loom control program for Windows computers: *WeavePoint*. It comes with the exact loom driver needed to run the Compu-Dobby with your number of harnesses. You can download a demo of WeavePoint at http://www.weavepoint.com/.

You will need to setup the software to communicate with your Compu-Dobby. Please refer to the manual for the software you've chosen for help with this.

TRAVELING WITH THE WDL

TRAVELING WITH YOUR WORKSHOP DOBBY LOOM

When traveling with your WDL, it is a good idea to replace loose hardware on the loom or to put it in a sealable plastic bag and pack it with your tools.

24" WDL Disassembly

Remove the Compu-Dobby

1) Turn off the Compu-Dobby, unplug the power cord from your outlet and the Compu-Dobby and coil up the power cord for travel.

2) Disconnect the cable from the Compu-Dobby and your PC and coil it up for travel.

3) Remove the Compu-Dobby from the IDU and set it down.

4) Remove the shuttle tray/wood backing plate from the top of the IDU (the one that originally came attached to the back of the Compu-Dobby).

5) Attach the wood backing plate to the back of the Compu-Dobby.

6) Strap the Dobby Slide Plate in place on the loom.

Remove the beater

1) Remove the bolts securing the Beater Top to the Beater Legs and remove it from on top of the Reed.

2) Lift the Reed out of the Race and secure it inside the IDU. Make sure the Reed Assembly is positioned vertically.

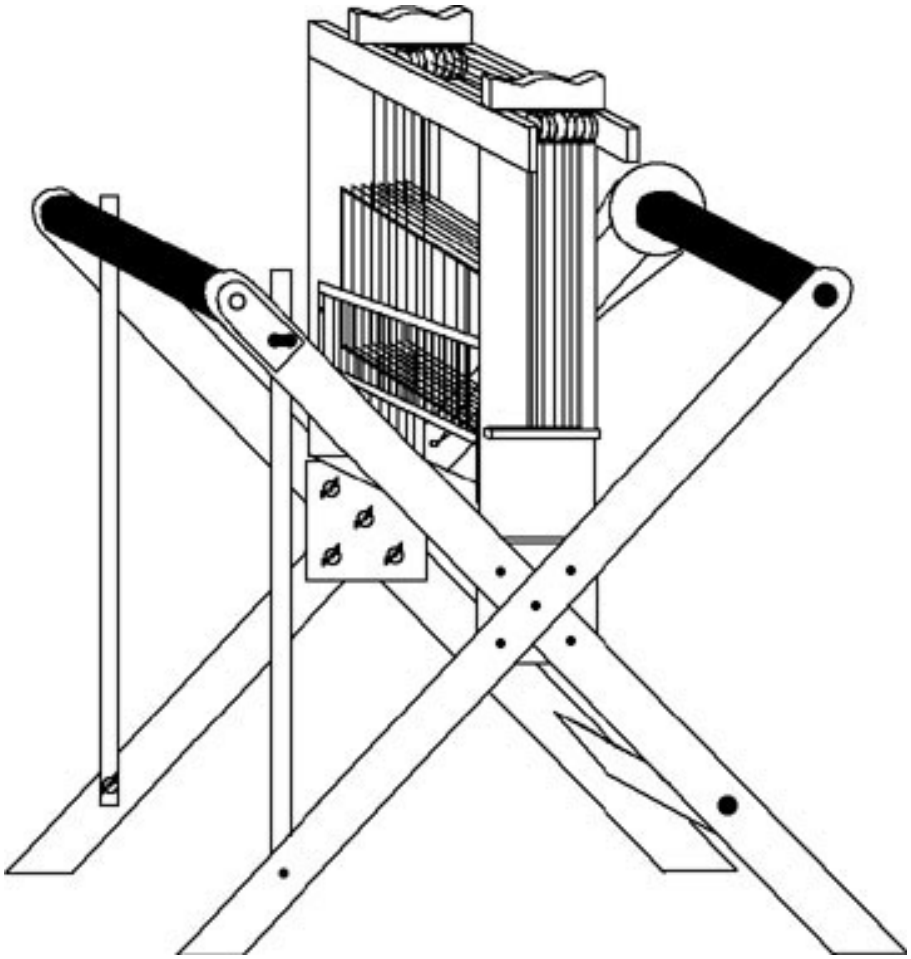

Figure 37 - 16" WDL with Compu-Dobby removed

Remove the beams

1) Disengage the Cloth Beam ratchet.

2) For the 16" WDL:

   a. Roll any loose fabric onto the Cloth Beam and place it on top of the IDU in the front beam rest cradle.

3) For the 24" WDL with the Cloth Storage Beam:

   a. Roll any loose fabric onto the Cloth Storage Beam.

   b. Disengage the Cloth Storage Beam ratchet.

   c. Remove the Cloth Storage Beam and place it on top of the IDU in the front beam rest cradle.

   d. Set the Cloth Beam aside for packing.

Note:

If you have a 2-beam setup, complete steps 7-10 for the upper separation beam and warp beam, then repeat them for the lower separation beam and warp beam. Place the additional warp beam on top of the two beams on the IDU to create a pyramid.

4) Unclip the Tension Tie-Up from the screw eye on the back right leg and unwrap it from the Warp Beam Drum.

5) Remove the Separation Beam from its mounting.

6) Remove the Warp Beam, carefully wrapping any loose warp around it, and place it on top of the IDU in the rear beam rest cradle.

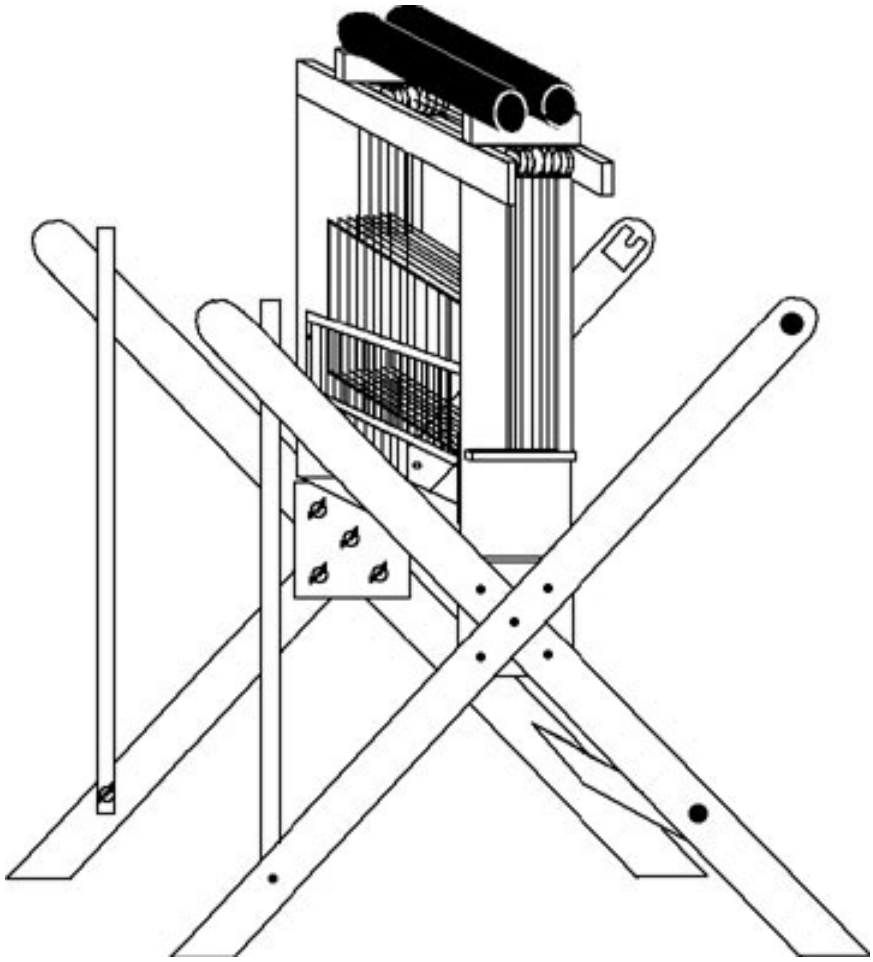

Figure 38 - 16" WDL with beams removed

7) To hold the beams in place, loop the two straps under the IDU and around the beams. Then feed the loose end of the straps into each of their buckles.

Remove the IDU and disassemble the frame

1) Unclip the left and right Treadle Cables from the IDU.

2) Unscrew the four wing nuts holding the IDU to the X-Frame.

3) Lift the IDU out of the X-Frame and place on the ground on its rollers. It is now ready to roll.

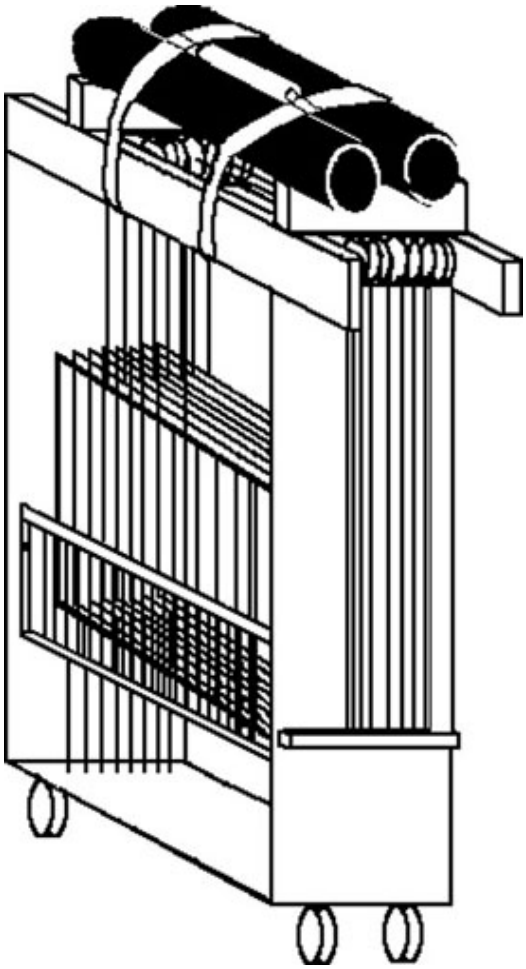

Figure 39 - 16" WDL with beams tied in place

4) Loosen the two outside stop collars on the Treadle Rod. Remove the Treadle Assembly from the X-Frame.

5) If you need to break down the Treadle Assembly further for travel, remove the next two sets of stop collars and remove the Treadles.

Note:

Always leave the inner stop collars on the Treadle Rod to avoid having to adjust these at re-assembly.

6) For packing, replace the stop collars back onto the rod and tighten the outside stop collars to retain them.

7) Remove the Beater Assembly as a whole if you can transport it. If needed, unbolt the Race from the Beater Legs and remove them separately.

8) Remove the Cross Brace and Separation Beam from the X-Frame.

9) Disassemble the X-Frame.

NOTE:
The X-Frame can be completely disassembled and re-packed into the box it was shipped in.

Now, you are ready to pack up your WDL for travel.

Reassembly (For 16" or 24" WDL)

When re-assembling your beams, keeping tension is important.

1) Reassemble the X-Frame and replace the IDU.

2) Attach the treadles to the treadle cables.

3) Install the Warp Beam first. If you are using the two-beam system, replace the lower warp beam first, then the upper warp beam. The beams should be on the pyramid on top of the IDU in this order.

4) Install the Cloth Beam. For the 24" WDL, install the Cloth Storage Beam next. Carefully unroll the warp as you bring the beam from its IDU cradle to its mounting location.

5) Replace the reed assembly on the beater.

6) Replace the Compu-Dobby on the IDU.

NOTE:
During this process, keep the warp square and with some tension to create as little disturbance to your warp as possible.

USING THE WDL

Note:

Unless otherwise noted, the instructions in this section are basic, general instructions for weaving and are applicable to many AVL and non-AVL looms. They should not be regarded as a substitute for training or experience.

WARPING SECTION

AVL advocates warping from back to front. We believe that this system works best with our looms and our warping tools are designed around this philosophy. If you prefer other warping methods, you will be able to adapt them to work on your new loom. However, we suggest you study the following warping techniques and try them out to get the most out of the Workshop Dobby Loom.

To learn more about your AVL loom and to learn how to get the most out of it, you may want to take a class at the AVL Weaving School. Complete information and a current class schedule can be obtained by phoning the AVL office (1 800 626-9615 or 530 893-4915) or on-line at http://www.avlusa.com/workshops.

Tying onto the Warp Beam

The WDL comes with a sectional beam that can be used as a plain beam when the metal hoops are removed. You might want to make a permanent set of Extension Cords to use when warping the Beam. Extension Cords are also called "apron cords" and serve the same function as the apron on other Plain Beams. They give you "reach" from the Warp Beam and allow you to weave every possible inch until the end of the warp touches the last Harness you are using. Make them out of a strong non-stretchable linen or cotton cord. You will need to make one Extension Cord for each section of your warp. When using the beam as a sectional beam, this will be one cord per section. Using the same number for the sectional beam and the plain beam will work well. For each Extension Cord:

1) Measure a piece of cord long enough to reach from the axle of the Warp Beam, at least one and a half revolutions around the Beam and then reach to the back most Harness.

2) When measuring the length of the cords, take into account that, when the warp is attached to the Extension Cord the knot between the cord and the warp needs to fall between the Crosspieces of the Sectional Beam, not on them. This will keep the warp smooth on the Beam so it doesn't go over the knots created when attaching the warp to the cords.

3) Now double that length and cut it. All Extension Cords should be exactly the same length, so cut them all at the same time.

4) Take the two ends of the cord and knot them together, using an overhand knot.

5) Wrap the cord around the center bar of the sectional beam with a larks head knot. You will also use a larks head knot to secure the warp threads to the extension cord.

6) Route the extension cords in a "Z" shape, from under the Warp Beam up and over the Separation Beam to the rear of the loom and under the Warp Beam, when looking from the left side of the loom.

Adjusting the Tension Device on the WDL

Before winding on the warp, check the tension device to make sure the rope is wrapped twice around the tension drum and that the rope end is clipped to the eyebolt. This will prevent the warp beam from slipping backwards during winding and threading.

Warping the Plain Beam

To warp a plain beam we recommend the following method in which the warp is wound on with the use of a Raddle. We have found that this method aids in getting a uniform warp tension, especially when dealing with long warps.

Creating Two Crosses

To begin, wind the warp on a warping board or reel. Make sure you put in two crosses, one at each end of your warp:

1) The Threading Cross (each thread crosses the next thread in opposite directions; all are secured in a single loop).

2) The Raddle Cross (warp threads are tied in groups, depending on how many ends will be put in each section of the raddle).

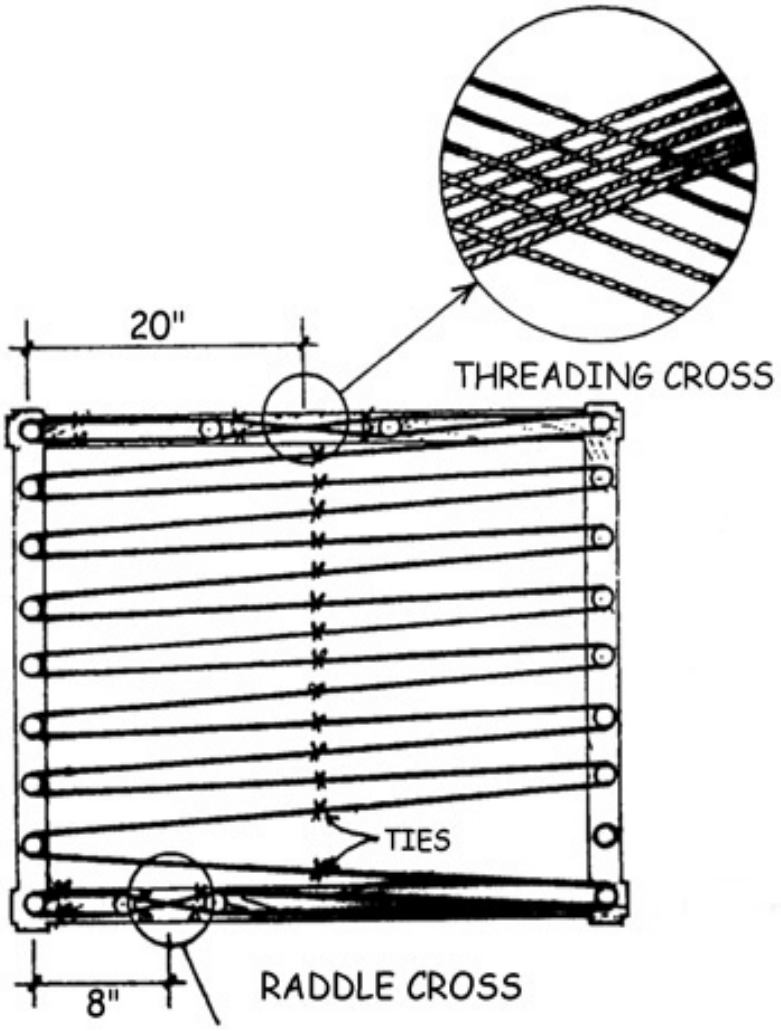

Figure 40 - Warping Board with Two Crosses

Securing the Crosses

Before removing the warp from the board or the reel, secure the crosses. Use four ties to secure each cross. These ties go on each side of both pegs holding the cross.

It is usually a good idea to use different color threads for the ties on the tops of the pegs and another color to tie the bows underneath the pegs. By color coding your ties, you are less likely to twist the warp later.

Removing the Warp for the Warping Boards

Remove the warp from the warping board by chaining or by winding on the kitestick. Start from the threading cross and proceed to the raddle cross.

Since the capacity of the warping board is limited, for wide warps you will end up making a number of mini-warps and taking them off individually.

Attaching the Raddle

Now secure the raddle to the back of the loom.

Sticks in the Raddle Cross

Place two lease sticks in the raddle cross and secure together with string through the holes in the ends of the sticks. Now remove the ties from the raddle cross and spread the warp out on the sticks.

Measure the center of your raddle to use it as a center of your warp. The warp threads should go through the middle of the raddle.

Feeding the Raddle

To feed the raddle, distribute yarns through the raddle by dropping each raddle cross group into a dent in the raddle.

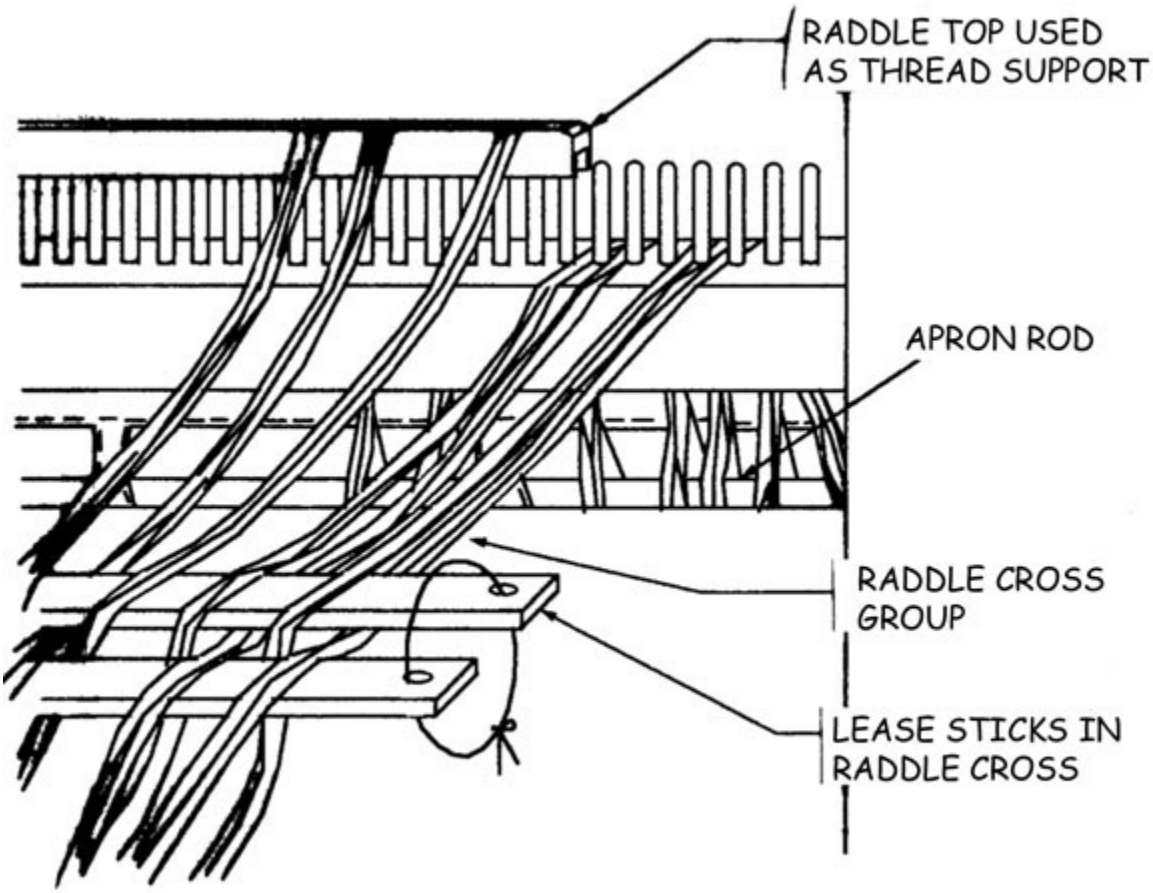

Figure 41 - Raddle

If you are using an AVL raddle with a sliding cover, slide it on after the raddle is threaded and secure it with two or three cord ties so it can't come off. Remove the raddle cross sticks when this is completed.

Preparing the Paper

Prepare the paper for winding between the warp layers. Again, for the most professional results, and fewer tension problems, we suggest that the warp be as smooth, tight, and compact as possible. This would mean not using corrugated paper or sticks as they will make the warp too fat and/or lumpy. Corrugated paper is just too soft and the warp can never be wound tight enough with it. Heavy wrapping paper works well; seventy pound craft paper is good. If you are going to be using smooth, slippery warp yarns like fine linens or perle cottons, the edge yarns are going to need extra help in order not to slip off.

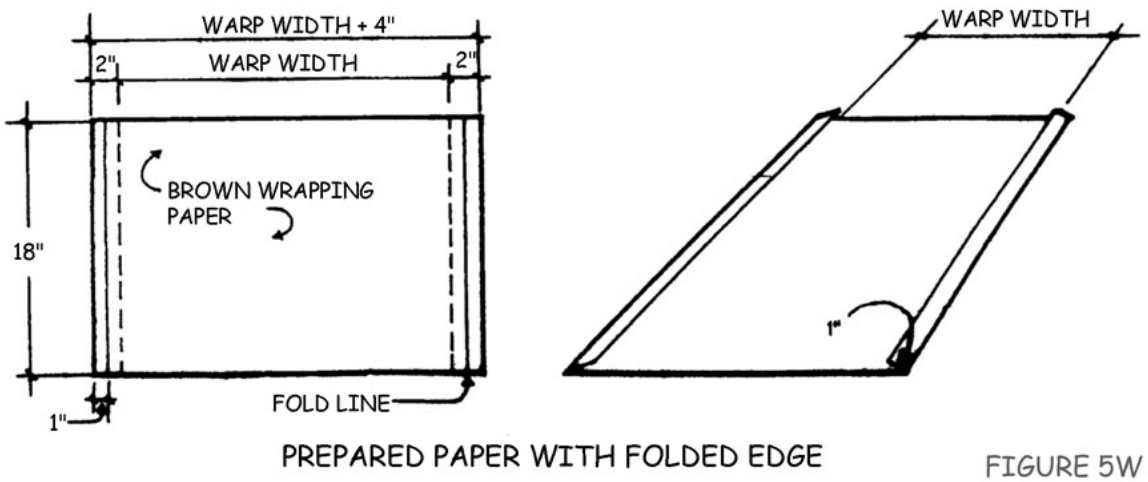

Figure 42 - Prepared Paper with Folded Edge

To do this, cut your paper 4" wider than the warp width and then fold over the edges an inch on each side. Be sure the warp is wound between the two folded edges not overlapping them.

Winding the Warp On

NOTE:

> **From the left side of the loom, the warp is wound onto the beam by turning in the counter-clockwise direction.**

Before you start winding the warp onto the warp beam, attach the section of the warp to an extension cord. To do so, tie an overhead knot in the warp threads from one section and slip that knot into the opening of the larkshead knot you created in the extension cord. Pull it tight.

When winding the warp on from the back, i.e., with the warp spread out in back of the loom, turn the crank in a counterclockwise direction so that the warp comes in from the bottom.

Remember; wind the warp on **tightly** under a lot of tension. This will vary with each warp material, but a good rule to remember is that the tension of the wound on warp must be greater than the tension during the weaving operation. You will need one person to hold a warp under tension on the back and one person to wind the warp on the beam using a handle. The person winding the warp can also insert the paper.

If you have to do it yourself, you can use the jerking method. Make one turn around with your beam crank and then go to the back of the loom and jerk one section at a time to make the warp that is already on the beam tight. The idea of this method is that the warp does not need to be under tension all the time, but the part that is on the beam has to be tight. Make another turn, go to the back of the loom and jerk all the sections again and so on. If you have a wide warp, you might need to do up to ten jerking motions after each turn.

Threading Cross

When you come to the end of your warp, insert lease sticks in your threading cross.

Remove the Raddle

Now remove the ties from each individual threading cross and spread the warp out on the sticks.

When the warping is completed, free the warp from the raddle. If you have an AVL raddle, first untie the security strings, lift the raddle top off, and remove the warp from the raddle. Afterwards, replace the top on the raddle and leave it in its place on the back of the loom if so desired as it will not interfere with the weaving process. Then be sure to bring the end of the warp around the separation beam so that it now travels into the loom.

Warping the sectional beam

The WDL Sectional Beam can be warped in sections using a Warping Wheel. Throughout the warping process, the Warping Wheel automatically keeps a constant and uniform tension on the warp.

Using the Warping Wheel

The Setup

1) Adjust height so position of mini-raddle is just below eye level.

2) Adjust the wind-off tension with toggle and cord. Tie cord to prevent slipping.

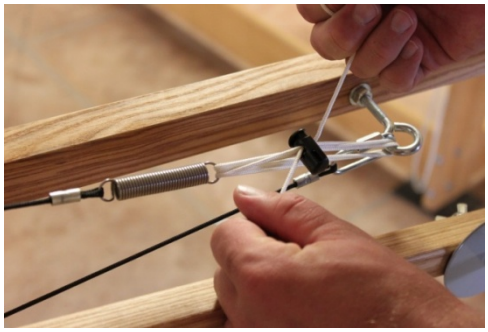

Figure 43 - Adjust Wind-off Tension

3) Adjust the warp length by moving the spools on the arms.

4) Reset the Revolution Counter to Zero

5) Setup Cones with the Cone Caddy

Making the First Section

6) Open and secure the raddle top using the removable pin.

7) Slide the thread(s) under the metal catch clip, tails facing to the left. Tails should be about 5 inches long.

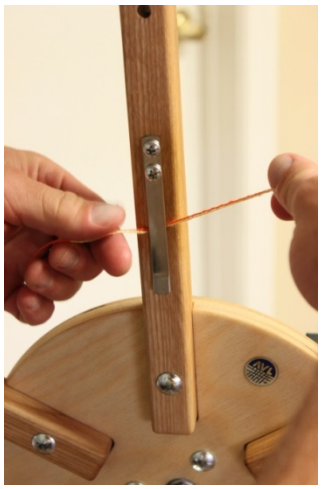

Figure 44 - Catch Thread Ends

8) Bring the thread(s) up and over the left side of the top spool so that you are ready to wind the Warping Wheel in a counter clockwise motion.

9) Continue in this manner until you have the number of threads you need for the section.

Figure 45 - Wind Counter Clockwise

10) After you have wound one length bring the thread(s) around the back of the raddle and through a dent (working from right to left).

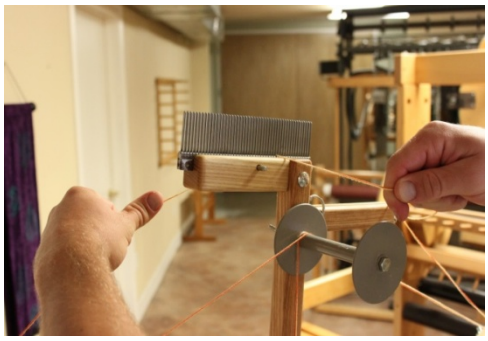

Figure 46 - Bring Thread through Raddle

11) Bring thread(s) down over the end you just wound and secure in the silver clip (swooping under from left to right).

Tying Off

12) Put the raddle top back on. Cut the bout threads just to the left of the clip and under the threads going over the wheel.

13) Hold onto the threads securely at the raddle (so they don't slip through. Below, wrap the cut threads around the clip.

Figure 47 - Hold Threads at Raddle

14) With the raddle top secure, remove the pin from the raddle holder while holding onto the threads.

Figure 48 - Remove Raddle from Top Position

15) Bring the raddle down to the winding-on position and secure with the pin. Tie a knot in the thread past the raddle so it won't slip through.

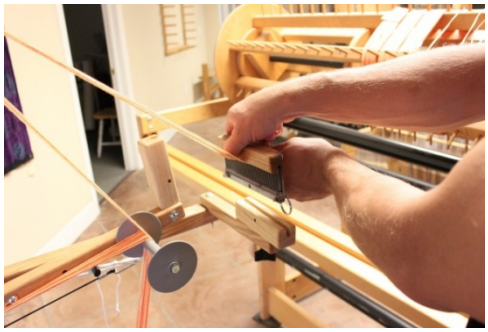

Figure 49 - Place Raddle in Lower Position

16) Take the extension cord from your beam. Create a larks head loop at its end and loop it around the knotted end of your warp section.

Figure 50 - Place Extension Cord around Thread Bundle

17) Before the last part of the threads pass through the raddle, tape the threads on the loom-side of the raddle in their sequence using masking tape. This will help you keep the threads in order when you thread the harness.

18) As you wind on, pivot the raddle to adjust the width of the section to fit exactly in-between the pegs on your sectional beam.

Figure 51 - Pivot Raddle

Winding the Warp On

NOTE:

From the left side of the loom, the warp is wound onto the beam by turning in the counter-clockwise direction.

Before you start winding the warp onto the warp beam, attach the section of the warp to an extension cord, tie an overhead knot in the warp threads from one section and slip that knot into the opening of the larkshead knot you created in the extension cord. Pull it tight.

When winding the warp on from the back, i.e., with the warp spread out in back of the loom, turn the crank in a counterclockwise direction so that the warp comes in from the bottom. Warp tension will be set by the Warping Wheel. When you reach the end of the warp section, remove the threads from the Warping Wheel catch being careful not to drop any. Stroke the threads to achieve uniform tension on the threads, and then continue winding while maintaining tension on the thread ends with your hand. When you reach the Warping Wheel Reed, grab the threads on the other side of the Warping Wheel reed with your other hand without losing tension on the Warp Beam and release the threads from the other side of the reed. Switch hands and pull the warp through the Sectional Beam Reed. Tie the warp ends into a slip knot and continue winding onto the beam.

Routing the Warp

Routing the warp for threading is different than for winding on. The warp goes rearward under the bottom of the warp beam, then up over the Separation Beam toward the heddles forming a clockwise arc when viewed from the left side.

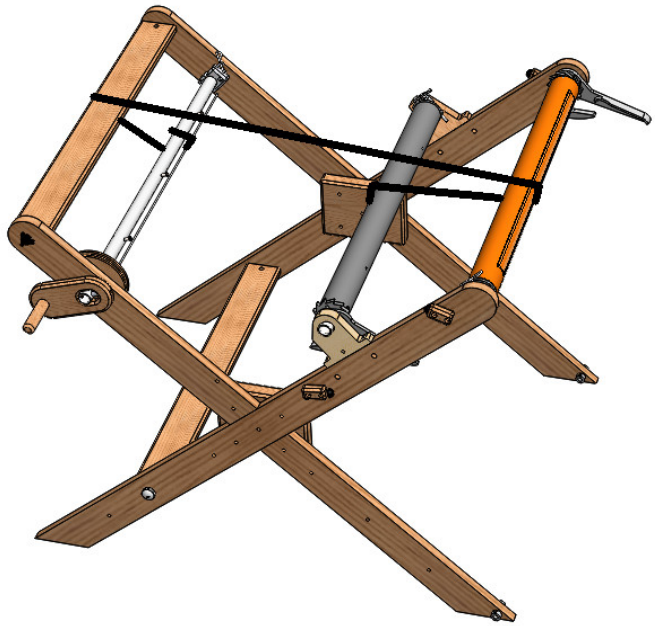

Figure 52 - Single Beam Warp Path

Two-Beam

For those who ordered the Two-Beam, it is wound on in exactly the same manner as the first warp beam except when winding on the warp to the upper beam, the warp goes under Separation Beam and up to the top warp beam. To route the thread for the upper beam, he warp goes over the top of the warp beam, then down under the upper Separation Beam toward the heddles.

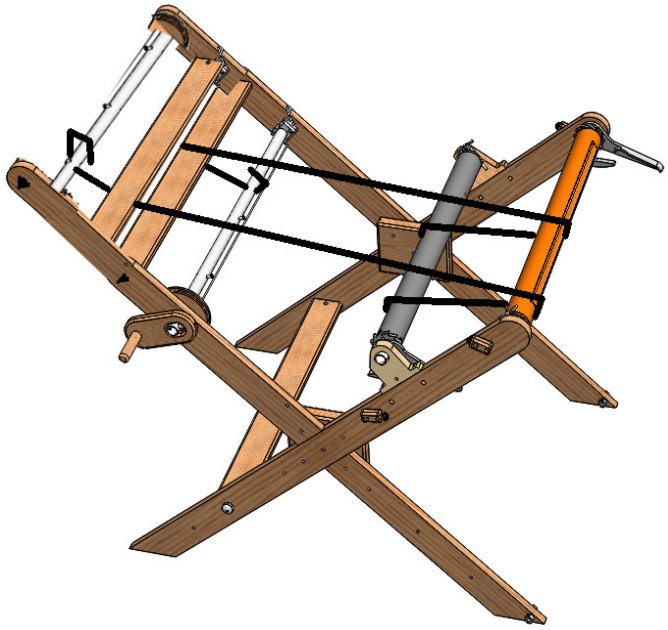

Figure 53 - 2-Beam Warp Path

THREADING, SLEYING, AND TYING ON

To make it easier to reach the heddles, you may want to remove the cloth beam and the beater and place a stool (or exercise ball) in front.

Unused Heddles

The heddles are part of the harness structure and you should have at least one near the end of each harness stick to help hold the harness together. Groups of empty heddles can interfere with the movement of the shafts if they are left near the threaded heddles. After threading is complete, make sure that the unused heddles are pushed to the far sides of the harness sticks. Before threading the loom, you may want to determine which heddle to start with so that you will have approximately the same number on both sides.

For balance, there should be approximately equal numbered groups of unused heddles on both sides of each harness. In some cases, such as a very wide warp with a lot of unused heddles on the ends of the harnesses, you may need to tie each group of unused heddles into a tight bundle to keep them from falling off the ends of the harness sticks or you may wish to take heddles off the loom altogether.

Note:

In the first six months of using a new loom with polyester heddles, the heddles may stretch out slightly to adjust to the harnesses.

Threading the Harnesses

Now we're ready to thread the loom. If you are right-handed, it is recommended to start at the right side of the warp. Grasp one group of ends in your left hand and your sley hook in your right hand. Direct the "hook end" of the sley hook through the "eye" of the first heddle you need to thread. Pull the thread through (for example, if you had a straight draft on eight harnesses, your first thread would go through the eye of a heddle on the 8th harness. The second thread would be threaded through the eye of the heddle on the 7th harness, the third thread through the 6th harness, and so on).

Threading the Reed

Now sley the warp ends through the reed. Some weavers start from the right side; some from the left; some in the middle. But, in all cases, be sure to measure accurately before starting so that the warp will be centered in

the reed. Position the reed for sleying in whatever manner works best for you.

Combing onto the Cloth Beam/Sandpaper Beam (16" or 24" WDL)

Note:

If you are using the Cloth Storage Beam on the 24" WDL, move on to the next section.

Take a group of ends about 3" wide with one hand and use the other hand to comb them "flat". This can be done using a common hair comb. Starting at the reed, gently comb the yarn toward the ends until the yarn is flat and spread out. Now gently pull with the other hand to give it a little tension and lay it over the abrasive surface of the cloth beam with the ends hanging down. Repeat this procedure all the way across the warp. Now that you have nice even tension, you can wrap the ends around the bottom of the cloth beam.

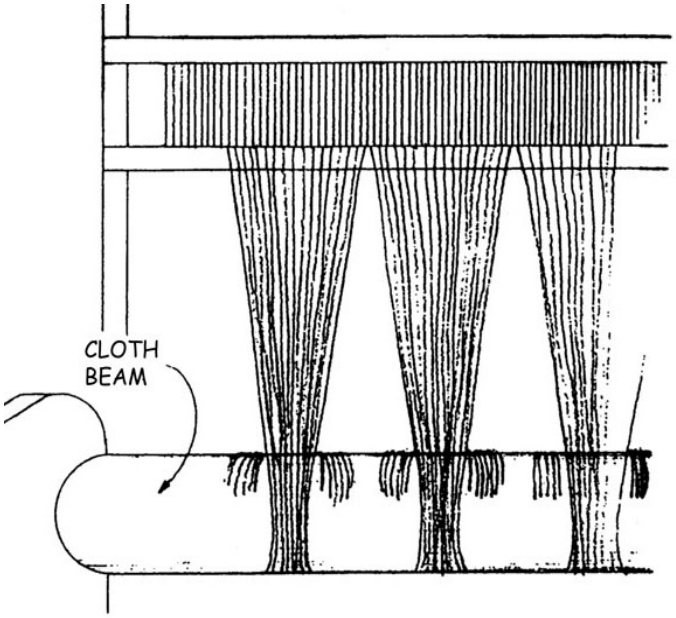

Figure 54 - Wrapping Warp around the Cloth Beam

If you find that you are having trouble with this method, a thin stick, an aluminum blind slat or something similar can be used as an aid. Place the stick across the top of the beam and slide it around the in the direction of the loose warp ends, clockwise if viewed from the left side of the loom, until the stick has reached the underside of the warp where the warp first touches the Cloth Beam. Check that this action has not distorted your even warp tension. If it has, repeat the step. While continuing to hold the stick, rotate the Cloth Beam to wind on the warp and trap the stick under the warp.

Tying onto the Cloth Storage Beam (24" WDL Only)

Note:

When using the Cloth Storage Beam, you will need to advance the warp from the Cloth Storage Beam instead of the Cloth Beam for the first several inches until the apron has passed completely over the Cloth Beam. Once the apron has been advanced so that your cloth is laying on the Cloth Beam, you will be able to advance the warp from the Cloth Beam.

Unwind the Tie-On Cord and Rod from the Cloth Storage Beam and route around the Cloth Beam towards the reed. This appears as a counter-clockwise arc when viewed from the left side of the loom.

Now tie the ends to the metal rod. Starting from the middle, bring a first bundle toward you over the apron rod, then around and under it. Divide it in half and bring one half up on each side of the bundle. Use the ends to tie a surgeon's knot. It is the same as the first tie you make tying a shoelace, except you loop the end through twice. This kind of knot is very good for readjusting the tension.

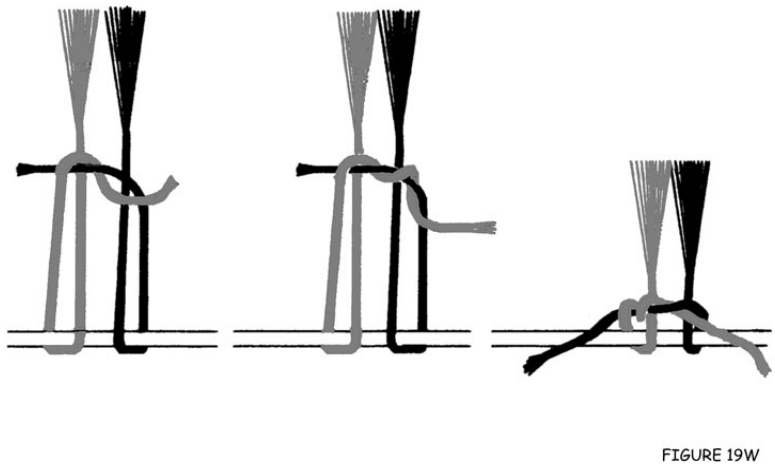

Figure 55 - Tying On

Start with one section in the middle, then the far right and the far left outside ones. Work your way in.

By now, the sections that were tied first are quite a bit looser than the ones tied last. To correct this, you do not need to untie the knots, simply grasp the ends and pull them away from you, then re-tighten the knots. Repeat this until all of the sections are at approximately the same tension.

Setting the Warp Tension

Ensure that the Cloth Beam and Cloth Storage Beam (24" WDL ONLY) pawls are set in the ratchets. To establish tension, wind the warp forward slowly

and just a small amount using the Cloth Beam or Cloth Storage Beam handle. Now feel the warp for tension. If the warp is too loose, pull the two loose Tension Tie-Up Cord ends to tighten. Wind the warp forward a little and check it again. If the tension becomes too tight, squeeze the button holding the Tension Tie-Up Cord to release it.

NOTE:

Avoid using too much tension as over-tensioning the warp will stress the fabric and potentially cause warp end breakage.

WEAVING PROCEDURES

Bobbins

AVL shuttles use stationary, open end bobbins. The advantage of using this type of bobbin over the conventional spinning bobbin is that as soon as the shuttle is caught, thread stops coming off the bobbin, whereas the spinning bobbin tends to keep spinning and unwinding thread even after the shuttle is caught. The stationary bobbin allows the weaver to more easily obtain a clean selvage edge. To purchase Shuttles or additional bobbins from AVL, please call us at 530-893-4915 or go to our website: http://www.avlusa.com. Instructions on winding bobbins and using our shuttles are included with the shuttles. If you are using shuttles from another source, please refer to their instructions.

Starting Your Weaving

When beginning your project, first weave in 1" of a strong, medium weight weft with a tabby weave. Check the tabby weave for errors. Any errors in the threading or sleying will show up here and it is an excellent time to make corrections.

Advancing the Cloth

To advance the cloth, you simply wind it forward by using the ratchet handle while the beater is in its forward position. Make sure the fell of the cloth does not go beyond the front of the beater in order not to have to wind it backwards. This easy, rapid method of advancing the cloth makes it practical to advance the cloth about every 2" of weaving. By maintaining this 2" weaving space, the swing of the beater and the shed angle are kept more nearly constant and this makes it much easier to weave a uniform fabric.

ADDITIONAL LOOM INFORMATION

LOOM MAINTENANCE

Tightening the Bolts

The Workshop Dobby Loom frame is designed to be disassembled for easy traveling. When reassembling it, make sure to tighten the bolts snugly and check the tightness of any bolts that were not removed. If you leave your loom assembled for long periods, check the bolts for tightness periodically.

Lubrication and Cleaning

There are several mechanisms on your loom which will benefit from the occasional light application of an appropriate lubricant. Not all lubricants are suitable in the weaving environment. Machine oils and greases, for example, may provide plenty of slick, but they also capture yarn dust and will, over time, actually impede the action of your loom.

Loom Parts	**Lubrication and Cleaning**
Shuttles, Shuttle Race	Paste Wax
Axles (pulleys)	Silicon Spray
Warp Beam Metal Rods (where metal works against the wood frame)	Paraffin
Warp Beam Brake Drum	Sandpaper

Checking Cords and Cables

Check the cords and cables on your loom periodically. All machines wear and cords are usually the first things that fatigue on a loom.

Tool Kit and Spare Parts

Here's a list of the basics, nice-to-have-around items:

[ ] socket wrench with

[ ] 7/16" socket

[ ] 6" or 8" crescent wrench

[ ] 4-1 screwdriver or medium Phillips and standard

Screwdrivers

[ ] paste wax

[ ] 0000 steel wool pad

[ ] 220# sandpaper

[ ] paraffin wax

TROUBLESHOOTING

Harnesses

Your WDL has polyester heddles. The polyester heddles are carried on transverse harness sticks, top and bottom, and stabilized at the bottom by a series of springs. These hold the harnesses down and prevent your heddles from *floating*.

On occasion you will find that one or more of your harnesses will misbehave. There are a finite number of things that can cause these problems.

Symptom	**Possible Cause**	**How to Fix It**
A) The top harness stick collapses; it assumes a diagonal angle and one leg of the harness cable from which it is suspended goes slack.	1) Your heddles are bunched together towards the center of the harness or on one side only. This is a problem because the heddles are part of the harness structure.	Move a few heddles to each end of your harness sticks; just to the inside of the eyehooks. That way your harnesses will be balanced.

	2) The harness cable supporting the shaft has come out of its pulleys at the top of the loom.	Trace the cable back through its pulleys in the Harness Pulley Support and make sure that the cable is properly seated. Check the action of the Dobby Cable as well. Make sure that it moves easily up and down. If the Dobby Cable seems to bind, check for debris n the hole where it comes through the Dobby Top. You may need to use a very thin piece of wire to dislodge accumulated yarn dust or other debris.
B) The heddles float; they are lifted upwards by the warp thread when you tension the warp and your shed is not even or not large enough.	1) The tension in your warp is greater than the tension in the springs that hold the harnesses down.	Reduce the warp tension at the Tension Tie-Up or add additional springs to the harnesses.
C) One or more harnesses that are supposed to be raised don't.	1) Left treadle isn't being pressed all the way down.	Concentrate on getting both treadles all the way through their travel.
	2) Dobby Cables out of solenoid tip slots.	Rearrange the cables according to the assembly instructions.
D) Harnesses don't rise properly.	1) Harness cables have been hooked to the wrong harness.	Rearrange the cables.
	2) Springs have been hooked to the wrong harnesses.	Rearrange the springs.
E) Harnesses jam up on each other.	1) Heddles are not distributed evenly over the harness sticks.	Redistribute the heddles evenly on both sides from the center of the harness sticks.

Tension

Symptom	Possible Cause	How to Fix It
A) Your Warp Beam won't hold tension.	1) Your Tension Tie-Up has loosened.	Readjust the tie-up and either tie a bow in the cord ends or bind it tightly with a double wrap of cord.
	2) You have mis-routed your brake cable. If you have just installed the system, disconnected your Brake Cable, to move the loom, or warp the beam, you may very well have incorrectly replaced it.	Review the cable routing as shown in the Assembly Section (Page 11 and following).
	3) You may have warped your beam backwards. Consult the Weaving Section on page 37 which illustrates how your warp should be routed.	If you did warp your beam backwards, you will need to reverse your tension cable. Unclip the cord, loosen the cable, and wind it in the opposite direction. This is not a permanent fix. Use it only to weave off the warp you wound backwards.
	4) The sandpaper on your Cloth Beam is not grabbing the warp and pulling it around as it should	You'll very likely need to add SoftGrip or another kind of beam cover in order to get satisfactory warp tension,
	5) The surface of the Brake Drum has become polished and no longer offers sufficient friction to grab and hold the Brake Cable	Disconnect and unwind the Brake Cable. Lightly sand the surface of the groove in the Brake Drum with your #220 sandpaper. Replace the cable (but be sure about its routing!).
B) Your warp tension is different in different	1) It is not indicative of a tensioning	You should have used a Warping Wheel for sectional

places over the width of the warp.	problem. It is a matter of not having maintained even tension when warping the beam and there's no redress from the Tension System. It's just too late for this warp to be well tensioned.	warping or craft paper for plain beam warping. If you do not want to waste this warp, place something (folded paper or cloth) in the areas on the beam where your tension is looser. You will have to move your paper every time you advance the warp and also keep adding more since it will probably become looser and looser.
C) Excessive tension on the warp.	1) Tension Tie-Up too tight.	Adjust the Tension Tie-Up Cord.
	2) The tension rope has gotten crossed over itself on the warp beam brake drum.	Straighten out the rope.

The Shed

AVLs are designed with a shed which exactly meets the need; not too wide, not too narrow. And there is, of course, a reason for this precision. Raising harnesses higher than you need may give you a larger shed, but it's also a waste of time and effort. You only need enough warp separation for the shuttle to pass freely. However, because the shed on AVLs is so precisely calibrated, you do need to be sure that you're getting all that the loom can deliver.

Symptom	Possible Cause	How to Fix It
A) Restricted Sheds.	1) Treadle cables fell off the pulleys.	Replace the treadle cables so they go over the pulleys.

Beaters

Symptom	Possible Cause	How to Fix It
A) Shuttle flying off the track.	1) Tensioner in your shuttle is not adjusted.	The advantage of an end-feed shuttle is that it allows you to tension the feed of your yarn. Most shuttles of this design have adjustable tensioners. Be

		sure yours is set to match the characteristics of the yarn used.
	2) Bobbins not wound consistently.	If it's soft on the end and the wraps collapse and pull into one another, you will have to wind it again. Use an AVL Bobbin-Winding Guide.
B) One side of your fabric is beaten more tightly than the other, even if you are holding your beater in the middle. You have a diagonal beat line rather than horizontal.	1) Your beater is out of alignment.	To check, push your beater all the way back against the Beater Bumper Blocks, it should strike both sides at exactly the same time. If it doesn't, you'll need to adjust the bolts holding the beater to the loom.

Dobby

Symptom	Possible Cause	How to Fix It
A) Dobby skips.	1) Pressing too hard or too quickly on the treadles.	Press the treadles with a smooth, rhythmical motion.
B) Dobby slide plate jams.	1) Left treadle out of adjustment.	Check routing of left treadle cable. Make sure it is still in the pulley with keeper inside the Compu-Dobby box.

Left Treadle Issues

If you do not fully depress the left treadle each time you lift, you will experience problems with your harnesses. Because the left treadle is unweighted, it's easy to forget that you need to do this. However, this treadle does something very important — it releases the harnesses that were engaged for the previous pick, but only in the last fraction of its stroke. So, if you seem to be experiencing harness lifting problems, your use of the left treadle is the first thing to suspect.

THE FINE PRINT

AVL CUSTOMER SERVICE

AVL offers free technical support to the original owner of all our looms. This means if you ever have a problem, you can call, fax, or e-mail us and we'll help you find a solution. Please take advantage of this service; your satisfaction is extremely important to us.

Customer Service Phone: (530 893-4915)
Fax: (530) 893-1372
E-Mail: sales@avlusa.com

AVL WARRANTIES

Your loom carries a full warranty on parts and labor for two years from the date we ship it to you. Your Compu-Dobby is fully warranted for two years. If a part wears or breaks during this period, we will replace or repair it at our discretion, but at no charge to you.

AVL Returns Policy

All goods, excepting software, may be returned for refund within thirty (30) days of the shipping date.

A 15% restocking fee will be assessed for all but defective items.

AVL will pay all shipping costs for defective items within the continental United States for the entire warranty period. Special provisions apply for the return of looms (please contact your sales person for more information).

AVL will generally return repair or replacement items via UPS Ground service. Additional charges for expedited shipping are the responsibility of the customer.

NOTICE TO USERS IN THE EUROPEAN UNION

Products bearing the CE mark are in conformity with the protection requirements of EC Council directives 2004/108/EC, 2006/95/EC, 1999/5/EC, and 2009/125/EC on the approximation and harmonization of the laws of the Member States relating to electromagnetic compatibility, safety of electrical equipment designed for use within certain voltage limits, radio equipment and telecommunications terminal equipment and on the ecodesign of energy-related products.

Compliance is indicated by the CE marking.

The manufacturer of this product is: AVL Looms, Inc., 2360 Park Avenue, Chico, CA 95928 USA. A declaration of conformity to the requirements of the Directives is available upon request from the Authorized Representative. This product satisfies the Class B limits of EN 55022 and safety requirements of EN 60950.

Barclay-Phelps

CE MARKING SPECIALISTS

Hoi Yuen Road, Kwun Tong, Kowloon, Hong Kong

CERTIFICATE & DECLARATION OF CONFORMITY FOR CE MARKING

Company contact details:
AVL Looms, Inc., 2360 Park Avenue, Chico, CA 95928, USA
Tel: 530-893-4915 Fax: 530-893-1372

AVL Looms, Inc. declares under their sole responsibility that their:
Textile Producing Looms listed as follows

A-Series Looms with the following part numbers:
A30-8H-CD4, A30-16H-CD4, A30-24H-CD4, A30-32H-CD4-E, A30-40H-CD4-E, A40-8H-CD4,A40-16H-CD4, A40-24H-CD4, A40-32H-CD4-E, A40-40H-CD4-E, A48-8H-CD4, A48-16H-CD4, A48-24H-CD4, A48-32H-CD4-E, A48-40H-CD4-E, A60-8H-CD4, A60-16H-CD4, A60-24H-CD4, A60-32H-CD4-E, A60-40H-CD4-E, A72-8H-CD4, A72-16H-CD4, A72-24H-CD4, A72-32H-CD4-E, A72-40H-CD4-E

V-Series Looms with the following part numbers:
V30-16H-CD4-E, V30-24H-CD4-E, V30-32H-CD4-E, V30-40H-CD4-E,V40-16H-CD4-E, V40-24H-CD4-E, V40-32H-CD4-E, V40-40H-CD4-E

SDL looms with the following part numbers:
2010, 2030, 2010-30, 2030-30
(where the 2010 is a 20" weaving width with 16 frames, the 2030 is a 20" weaving width with 24 frames, the 2010-30 is a 30" width with 16 frames and the 2030-30 is a 30" width with 24 frames)

Workshop Dobby Looms with the following part numbers:
3010, 3020, 3030, 3040, 3050, 3060 (where the 3010 is a 16" weaving width with 8 frames, 3020 is 16" with 16 frames, 3030 16" with 24 frames, 3040 is 24" with 8 frames, 3050 is 24" with 16 frames and 3060 is 24" with 24 frames)

comply with the Essential Requirements of the following EU Directives:
Machinery Directive 2006/42/EC Low Voltage Directive 2014/35/EU EMC Directive 2014/30/EU
Radio Equipment Directive 2014/53/EU RoHS 2 Directive 2011/65/EU

and further conform with the following EU Harmonized Standards as applicable:
EN ISO 11111-1:2016 EN ISO 4414:2010 EN 60204-1:2006 + A1:2009
EN 61000-6-3:2007+A1:2011 EN 61000-6-1:2007 EN 300 328 V2.1.1

Dated: 16 June 2017 **Position of signatory:** President **Name of Signatory:** Theodore Kruger
Signed below:
on behalf of AVL Looms, Inc.