A-Series Dobby Loom Weaving Manual

AVL Looms
2360 Park Avenue
Chico, CA 95928-6785
U.S.A.
530 893-4915
530 893-1372 (fax#)
info@avlusa.com(e-mail)
www.avlusa.com

List of Figures

WARPING BEAMS

Note:

Unless otherwise noted, the instructions in this section are basic, general instructions for weaving and are applicable to many AVL and non-AVL looms. They should not be regarded as a substitute for training or experience.

LOOM ORIENTATION

Before you get started, please take a minute to familiarize yourself with how we describe the loom in this manual.

The front of the loom is where you will sit; the back of the loom is where the warp beam is.

Everything is referenced as if you were sitting in the weaving position. The right side of the loom is the side to your right as you are sitting at the loom and the left side is to your left.

The right and left of the dobby head is referenced as if you were standing right in front of it.

WARPING THE LOOM

AVL advocates warping from back to front. We believe that this system works best with our looms and our warping tools are designed around this philosophy. If you prefer other warping methods, you will be able to adapt them to work on your new loom. However, we suggest you study the following warping techniques and try them out to get the most out of the Workshop Dobby Loom.

To learn more about your AVL loom and to learn how to get the most out of it, you may want to take a class at the AVL Weaving School. Complete information and a current class schedule can be obtained by phoning the AVL office (1 800 626-9615 or 530 893-4915) or on-line at http://www.avlusa.com/workshops.

WARPING THE PLAIN BEAM

If you have ordered only a sectional beam, proceed to the section titled "Warping the Sectional Beam".

Various warping methods can be adapted to the AVL loom. However, we recommend the following method in which the warp is first wound on to the plain beam with the use of a raddle. Please study this method and try it. We

have found that it aids in getting a uniform warp tension, especially when dealing with long warps.

Creating Two Crosses

To begin, wind the warp on a warping board or reel. Make sure you put in two crosses, one at each end of your warp:

1. The Threading Cross (each thread crosses the next thread in opposite directions; all are secured in a single loop).
2. The Raddle Cross (warp threads are tied in groups, depending on how many ends will be put in each section of the raddle).

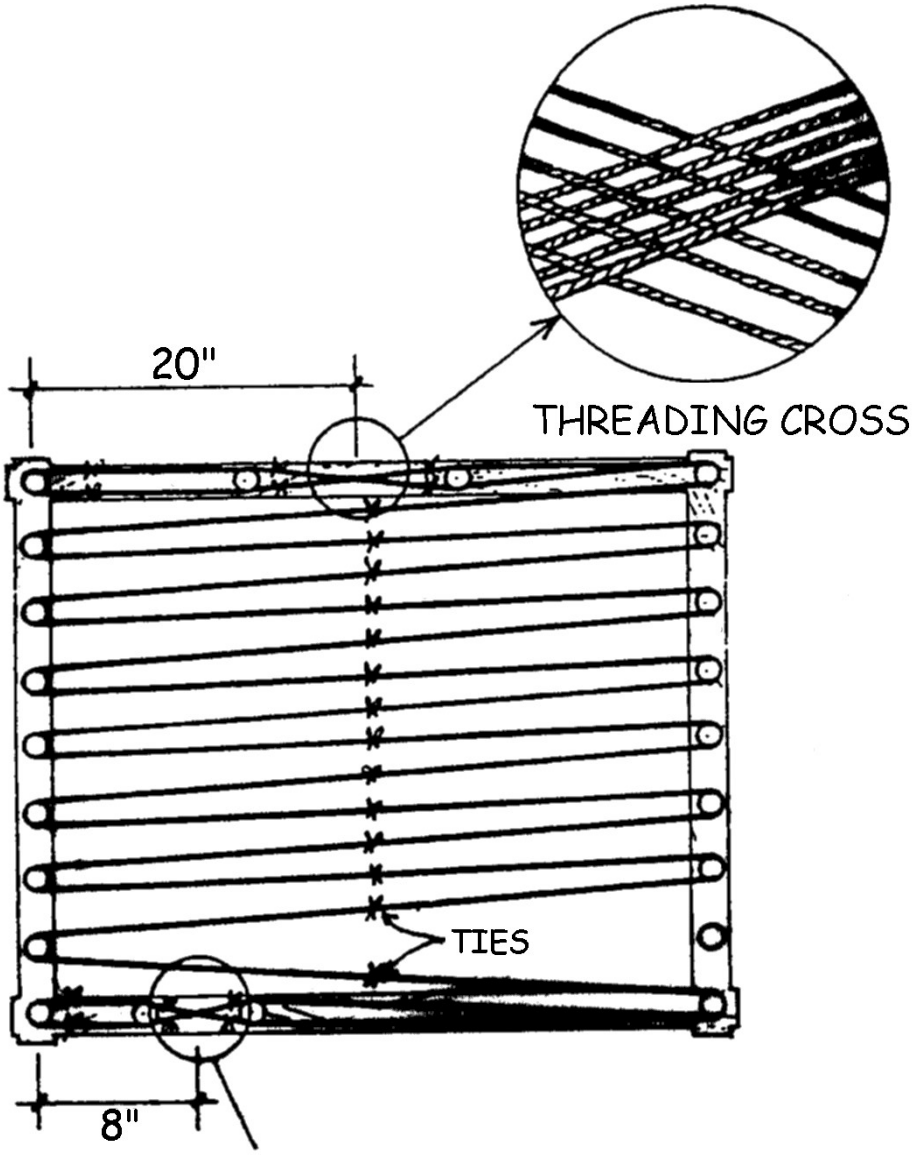

Figure 1 - Raddle Cross

Securing the Crosses

Before removing the warp from the board or the reel, secure the crosses. Use four ties to secure each cross. These ties go on each side of both pegs holding the cross.

It is usually a good idea to use different color threads for the ties on the tops of the pegs and another color to tie the bows underneath the pegs. By color coding your ties, you are less likely to twist the warp later.

Removing the Warp for the Warping Board

Remove the warp from the warping board by chaining or by winding on the kitestick. Start from the threading cross and proceed to the raddle cross.

Since the capacity of the warping board is limited, for wide warps you will end up making a number of mini-warps and taking them off individually.

Adjusting the Tension Device

Before winding on the warp, there are a few things to adjust on the loom.

1) Check the tension device to make sure the rope is wrapped three times around the tension drum and that the rope end is clipped to the spring. This will prevent the warp beam from slipping backwards during winding and threading.

2) Make sure the stop pin is in its place in the rear cloth take-up drum so it won't unroll.

3) Check the cloth take-up weight.

4) Turn the cloth take-up handle until the weight is in its topmost position.

Attaching the Raddle

Secure the raddle to the back of the loom. If you have an AVL raddle, simply slip it into the set of holes in the back of the rear vertical members.

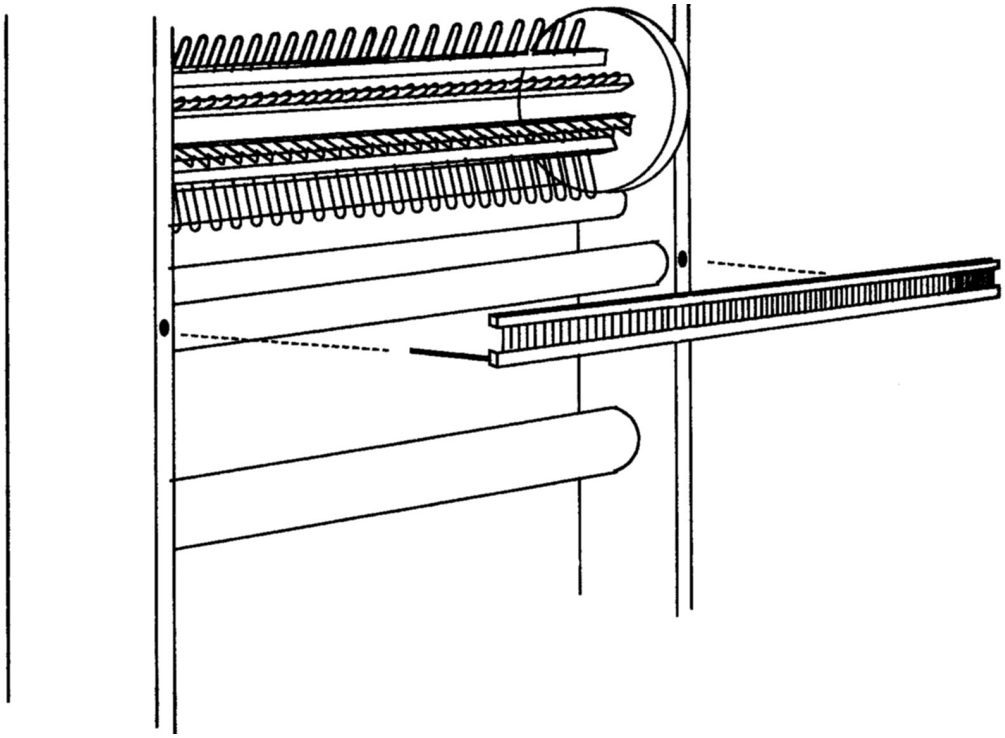

Figure 2 - Attaching the Raddle

Winding the Apron

Put your apron on the beam with velcro and wind your beam in the warping direction so that your apron is wound on the beam.

Attaching the Warp to the Apron

Bring the apron around the separation roller and put the metal rod through. You can lash your warp sections onto that rod or you can attach another rod which has been slipped through the loop at the end of the warp with the Raddle Cross.

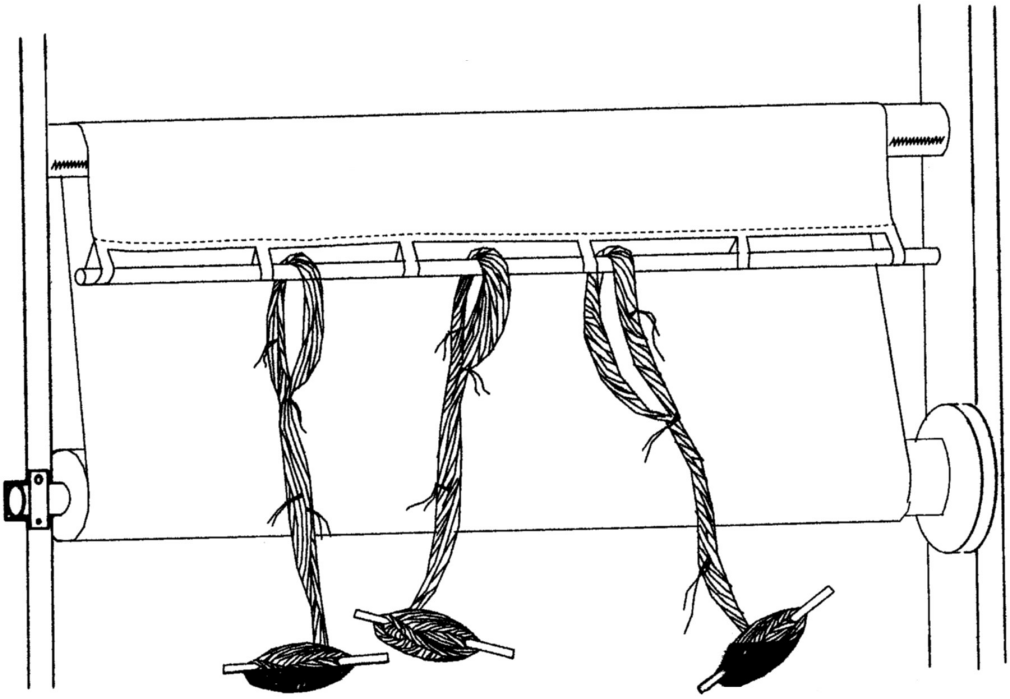

Figure 3 - Attaching the Warp to the Apron

Inserting Sticks in the Raddle Cross

Place two lease sticks in the raddle cross and secure together with string through the holes in the ends of the sticks. Now remove the ties from the raddle cross and spread the warp out on the sticks.

Measure the center of your raddle to use it as a center of your warp. The warp threads will usually go through the middle of the raddle.

If you have a narrow warp and are using a flyshuttle, you will want to offset your warp to ensure even selvedges. Offset the warp in the direction of the tensioning device on your flyshuttle. You will usually offset the warp by about half the length of the shuttle. When weaving, you will center yourself on the loom rather than the warp.

Feeding the Raddle

To feed the raddle, distribute yarns through the raddle by dropping each raddle cross group into a dent in the raddle.

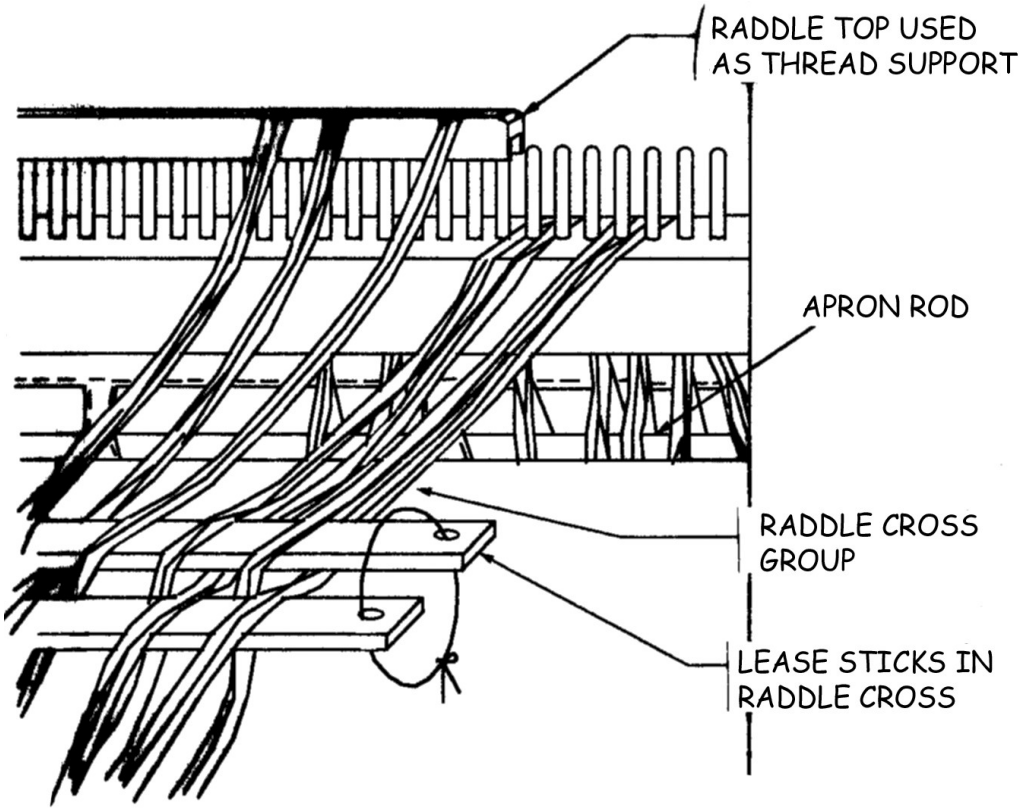

Figure 4 - Feeding the Raddle

If you are using an AVL raddle with a sliding cover, slide it on after the raddle is threaded and secure it with two or three cord ties so it can't come off. Remove the raddle cross sticks when this is completed.

Preparing the Paper

Prepare the paper for winding between the warp layers. Again, for the most professional results, and fewer tension problems, we suggest that the warp be as smooth, tight, and compact as possible. This would mean not using corrugated paper or sticks as they will make the warp too fate and/or lumpy. Corrugated paper is just too soft and the warp can never be wound tight enough with it. Heavy wrapping paper works well; seventy pound craft paper is good.

If you are going to be using smooth, slippery warp yarns like fine linens or perle cottons, the edge yarns are going to need extra help in order not to slip off themselves. To do this, cut your paper 4" wider than the warp width

and then fold over the edges an inch on each side. Be sure the warp is wound between the two folded edges not overlapping them.

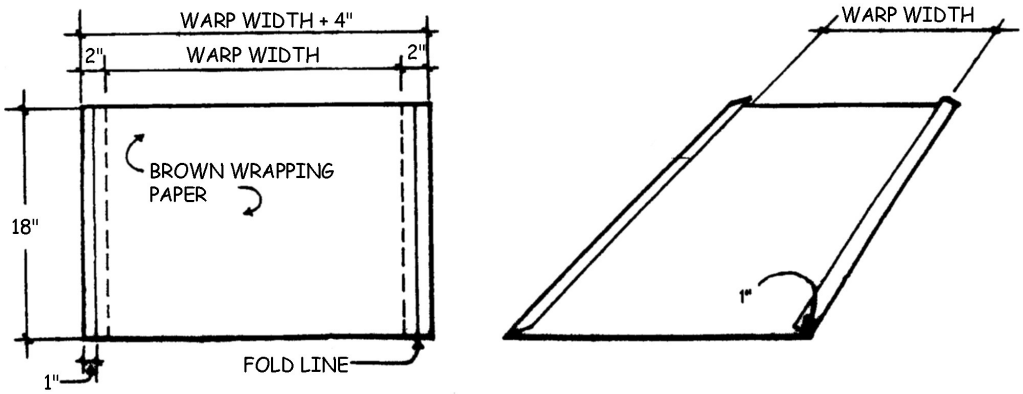

Figure 5 - Prepared Paper with Folded Edge

Winding the Warp

When winding the warp on from the back, as shown below, turn the crank in a counterclockwise direction so that the warp comes in from the bottom.

Note:

The warp handle is usually on the right side of the loom when you are standing at the back ready to warp. If you have a beam setup so that the warp beam handle is on the other side, make sure to wind it in the direction that will cause the warp to come in from the bottom.

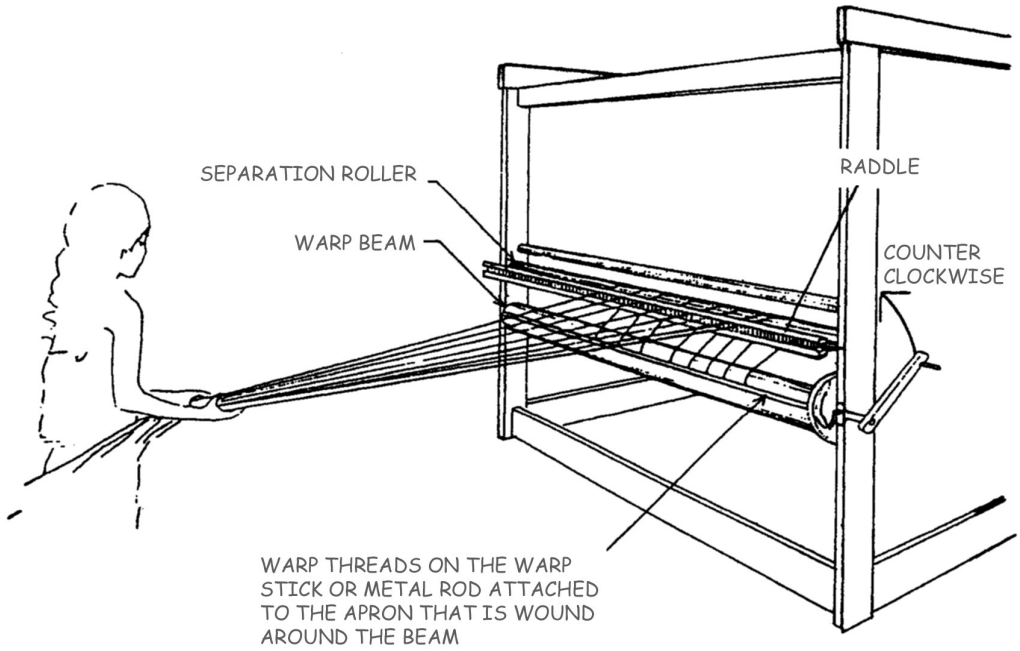

Figure 6 - Winding on the Warp

Remember, wind the warp on tightly under a lot of tension. This will vary with each warp material, but a good rule to remember is that the tension of the wound on warp must be greater than the tension during the weaving operation. You will need one person to hold a warp under tension on the back and one person to wind the warp on the beam using a handle. The person winding the warp can also insert the paper. For a wide, heavy warp, several helpers may be required.

If you have to do it yourself, you can use the jerking method.

1) Make one turn around with your beam crank.

2) Go to the back of the loom and jerk one section at a time to make the warp that is already on the beam tight. The idea of this method is that the warp does not need to be under tension all the time, but the part that is on the beam has to be tight.

3) Make another turn once all the sections are tightened.

4) Go to the back of the loom and jerk all the sections again and so on. If you have a wide warp, you might need to do up to several jerking motions after each turn.

Threading Cross

When you come to the end of your warp, insert lease sticks in your threading cross.

Remove the ties from each individual threading cross and spread the warp out on the sticks.

Remove the Raddle

When the warping is completed, free the warp from the raddle. If you have an AVL raddle, first untie the security strings, lift the raddle top off, and remove the warp from the raddle. Afterwards, replace the top on the raddle and leave it in its place on the back of the loom if so desired as it will not interfere with the weaving process. Then be sure to bring the end of the warp around the separation roller so that it now travels into the loom.

WARPING THE SECTIONAL BEAM

The AVL Sectional Beam can be warped in sections with the use of a Tension Box. The yarn travels directly from cones or spools, which are mounted on a rack behind the loom, through the Tension Box, and onto the Beam. Throughout the warping process, the Tension Box automatically keeps a constant and uniform tension on the warp. The Tension Box allows you to make longer warps than other methods.

You can also warp a sectional beam using the AVL Warping Wheel. With the AVL Warping Wheel you wind threads onto the wheel then wind them from the wheel directly onto the beam. When using a warping wheel, your warp length will need to be less than 24 yards.

EXTENSION CORDS

You might want to make a permanent set of Extension Cords to use when warping the Sectional Beam. Extension Cords are also called "apron cords" and serve the same function as the apron on the Plain Beam. They give you "reach" from the Warp Beam and allow you to weave every possible inch until the end of the warp touches the last Harness you are using. Make them out of a strong non-stretchable linen or cotton cord. You will need to make one Extension Cord for each section in your Sectional Beam. For each Extension Cord:

1) Measure a piece of cord long enough to reach from the axle of the Warp Beam, at least one and a half revolutions around the Beam and then reach to the back most Harness.

Note:

When measuring the length of the cords, take into account that, when the warp is attached to the Extension Cord the knot between the cord and the warp needs to fall between the Crosspieces of the Sectional Beam, not on them. This will keep the warp smooth on the Beam so it doesn't go over the knots created when attaching the warp to the cords.

2) Now double that length and cut it. All Extension Cords should be exactly the same length, so cut them all at the same time.

3) Take the two ends of the cord and knot them together, using an overhand knot.

4) Wrap the cord around the center bar of the sectional beam with a larks head knot. You will also use a larks head knot to secure the warp threads to the extension cord.

USING A TENSION BOX

The Tension Box is an essential tool for Sectional Warping, which:

1. Puts threads under even tension.
2. Spreads threads to the proper width of the section.
3. Makes a thread-by-thread cross.

Sectional Beam Calculation

First, you must calculate the number of spools or cones of yarn you will need. Each section is wound onto the Sectional Beam separately; therefore, you'll need to have one spool or cone for each end in that section. For example, if your section is 2" wide, with sixteen E.P.I., you would need thirty-two spools or cones of yarn.

To prepare for Sectional Beam warping, we need to calculate:

1. how many spools we need to wind
2. how many yards do we need to wind on each spool
3. total yardage for the project

- **NUMBER OF SPOOLS?**

Sectional Beaming requires the use of as many spools loaded with thread per individual section as your Ends Per Inch, or planned sett in the reed, dictates.

To calculate the actual number of spools required, we need to know:

1. how many EPI (this is the sett) are you going to use in the warp
2. what SIZE of SECTIONS (1" or 2") will you use on the Beam

If your warp is set at 24 epi per 1", you will need 24 spools for a Sectional Beam with 1" sections or 48 spools for a Beam with 2" sections.

 # OF SPOOLS = EPI x SIZE OF THE SECTION

- **NUMBER OF YARDS PER SPOOL?**

To calculate the number of yards per spool, we need to know:

1. the LENGTH OF THE WARP
2. NUMBER OF SECTIONS on the Beam

We calculate the number of sections by dividing the WIDTH OF THE WARP by the SIZE OF THE SECTION. If the warp width is 30” and we are using 2” sections, our number of Sections is 15.

 # OF YARDS PER SPOOL = LENGTH OF THE WARP x # OF SECTIONS

- **TOTAL YARDAGE?**

If it is a single color warp or if a color sequence is repeating in each section, the same spools or cones can be used to wind all the sections needed for the warp.

TOTAL YARDAGE = # OF SPOOLS x # OF YARDS PER SPOOL

It is important to make these calculations in advance so that you can purchase your yarn in spools or cones corresponding to the amount of yardage needed on each. Sometimes this is not possible and you will need to wind your own spools from yarn that is in larger packages. For doing this, you will need empty plastic spools, a bobbin winder (preferably electric), and a yardage counter. These items are available from AVL.

Feeding the Spool Rack

Next, place a spool (or cone rack) about 5' or 6' behind your loom. Place the spools (or cones) for the first warp sections on the cone rack.

Make sure you put each thread through the metal eye on the spool rack so the threads do not get tangled.

When arranging the spools on the spool rack, it doesn't matter whether you go top to bottom or bottom to top, the important thing is to be consistent in vertical columns and to place the spools in the order that the threads are in the warp.

Adjusting the Tension Device

Before winding the sectional beam, make sure to disengage the tension system so that the beam will turn counterclockwise swiftly. To do this, unlock the tension rope from the spring and completely unwrap the plastic

cord from around the tension beam drum. Also, remember to remove the weight from the tension arm.

Setting the Tension Box on the loom

The Track and Mount system is designed to hold your tension box securely on the back of the loom. See the Assembly Manual for instructions on installing.

Mount the Tension Box in the groove, with the Counter facing into the loom. The Tension Box is fastened to the Track and Mount with a small cross piece and wing nuts. This will stabilize the Tension Box and allow it to travel smoothly from one section to another. The wing nuts can be released for the Tension Box to move easily from side to side. Each time the Tension Box is moved and centered properly for a particular section, the wing nuts must be tightened again.

Tension Box Heddle Installation Instructions

The first time you use a Tension Box, you need to install heddles on the harnesses of your Tension Box.

Your Tension Box is delivered with one bundle of one hundred heddles. These are held together with twist ties. Leave these on for now. Refer to the following diagram to familiarize yourself with the Tension Box and its parts. Push down on one of the harnesses until it stops. This causes the other harness to go up. You will use that later for making a Threading Cross. Right now we'll need to use it to help put the heddles on the harnesses.

1) Remove the "heddle retainer" of the harness that is up, using a Phillips head screwdriver.

2) Notice there are four twist ties holding the heddles together. Separate the top two. Insert the top bar (of the harness that is up) into the space created by pulling apart the twist ties. Insert the bottom bar (of the harness that is up) into the space created by pulling apart the bottom two twist ties, making certain that the heddles aren't twisted. Now remove the twist ties.

3) Count off fifty heddles and cut the loop at the top between the 50th and the 51st heddle.

4) Now put the four twist ties back on the fifty heddles that were the last to go on the harness.

5) Remove these fifty and reattach the "heddle retainer".

6) Now push down on the harness that is up, making the other harness come up.

7) Remove the heddle retainer.

8) Pull apart the top two twist ties and insert the top of the harness (which is up) into the space created. Pull apart the bottom two twist ties and insert the bottom of the harness into the space created.

9) Reattach the heddle retainer.

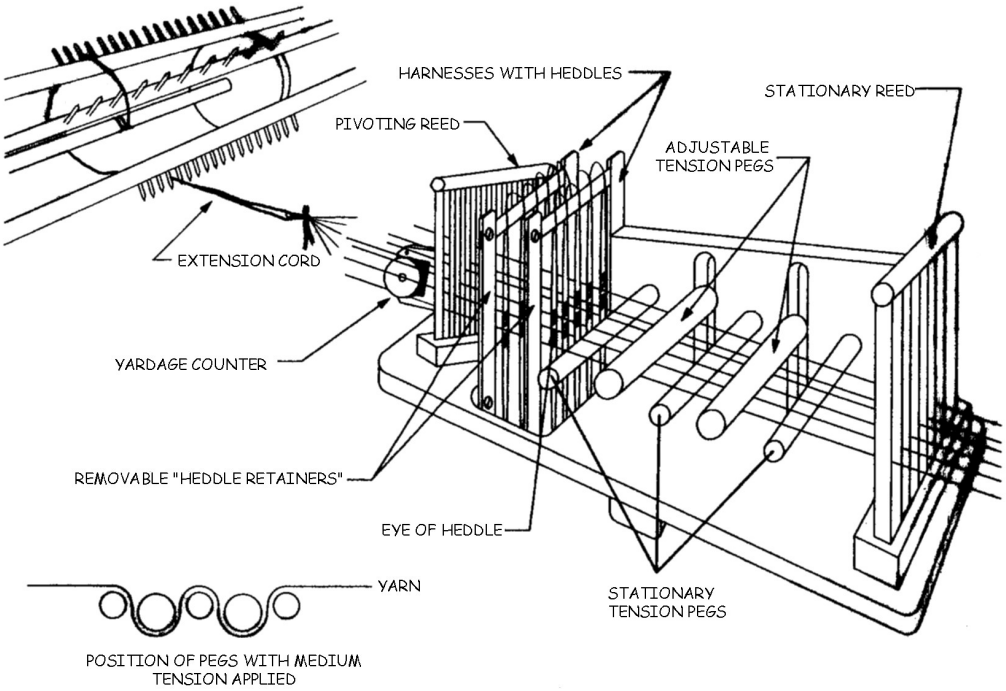

Figure 7 - Tension Box

Threading the Tension Box

The best way to thread the tension box is to take one thread from the cone rack and thread it all the way through all the parts of the tension box, then the next thread all the way through. It works best to use the threads from the rack in a vertical order rather than a horizontal order.

Now let's go through the sequence for threading the tension box.

1) First, move the two adjustable tension pegs up above the stationary pegs as shown above or remove them completely.

2) Now sley the thread through the rear (stationary) reed section using a sley hook. Since this reed is 8 dents per inch, you will divide the E.P.I. into 8 to find out how many ends will be in each dent (with 16 E.P.I, put two ends in a section). If your E.P.I. does not divide equally by 8, you can either vary the number of ends in each dent (with 20 E.P.I., alternate two and three ends in the dents) or thread the dents a little wider than two inches (with 20 E.P.I., put two ends in each dent; with 40 ends, the reed will be sleyed 2-1/2" wide).

3) Next, bring the thread straight through the tension peg section in-between the larger adjustable tension pegs and the smaller stationary pegs or just above the smaller stationary pegs if you have removed the larger ones.

4) Thread the end through the two sets of heddles. The first thread goes through the front set of heddles and the next thread goes through the rear set of heddles.

5) Repeat this alternating heddle threading for the rest of the ends. The heddle system will be used later to create the threading cross.

6) Now thread the end through the front pivoting reed. Here you have a choice of using an 8 dent or 10 dent reed. Pick the one that can be sleyed evenly and as close to the desired section width. If you cannot get the exact width of the section, sley your reed slightly wider. This will make it just slightly wider than the space between the pegs. The section will be narrowed down by pivoting the reed. Never sley the reed narrower than the section on the beam. There is no way to expand it.

7) After the tension box is completely threaded, the larger pegs are moved downward to apply tension. The further down they are moved, the more tension will be applied to the yarn. This is an adjustable system as different yarns require more or less tension. With a heavy wool, the pegs may only need to be moved half way down, whereas with a fine silk, the pegs may need to be moved all the way down and the yarn wrapped an extra time around one of the stationary pegs to get the proper tension. Once you have adjusted the tension correctly, do not change it during the winding of the beam, as long as you are using the same type of yarn.

Once the tension box has been threaded, it is not always necessary to rethread it. If you need to change spools or cones, simply tie the new ends

on to the old ends just before the rear stationary reed, then gently pull on the old ends until the new ends have come all the way through the box.

Winding the Warp

Before you start winding the warp, attach the section of the warp to an extension cord, tie an overhead knot in the warp threads from one section and slip that knot into the opening of the larkshead knot you created in the extension cord. Pull it tight.

Note:

If you will be using a flyshuttle and are planning a narrow warp, you need to offset the warp instead of centering it. This offset will ensure even selvedges.

See the following diagrams for routing the extension cords towards the tension box from the bottom beam position and the top beam position.

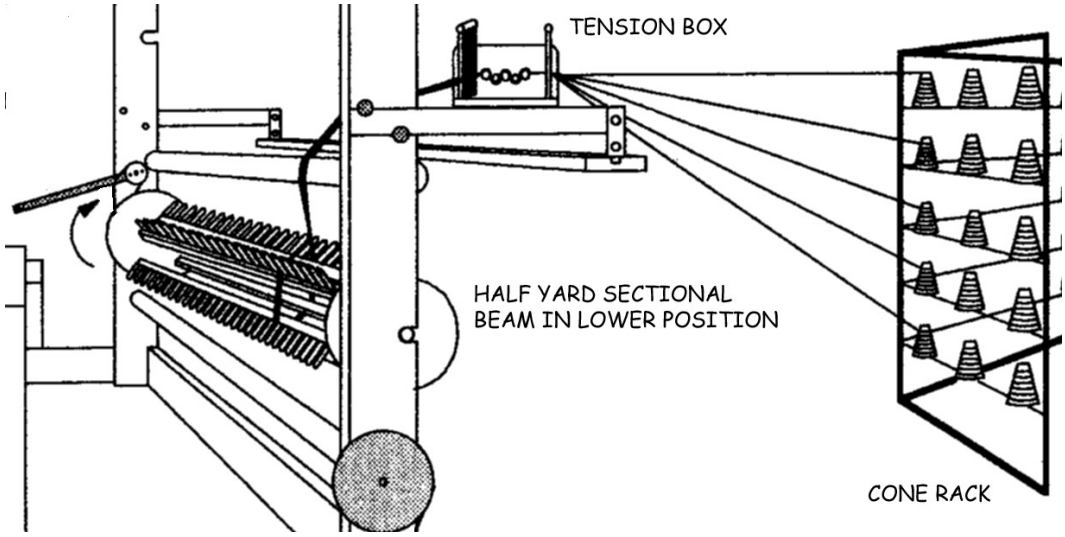

Figure 8 - Warping the Half Yard sectional beam in the lower position

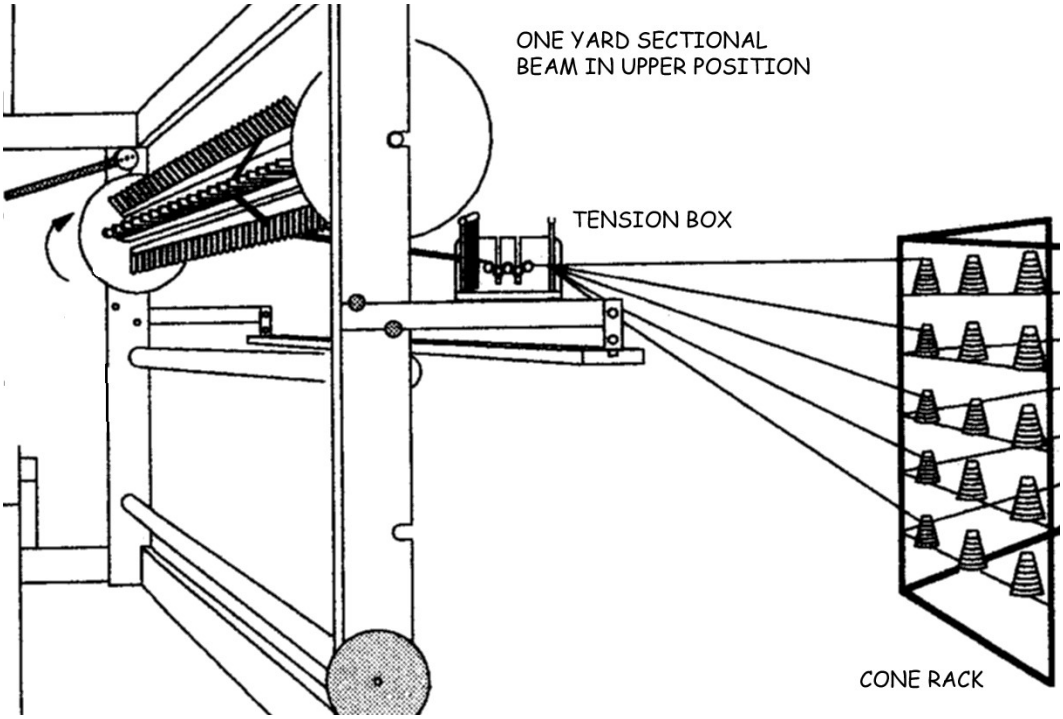

Figure 9 - Warping the one yard sectional beam in the upper position

Adjusting the size of the section

Line up the tension box approximately behind the section you will be winding. Now wind about one yard onto the beam. As you wind, you will need to fine tune the placement of the tension box along the track. When it is centered properly, tighten down the wing nuts under the tension box. At this point, you can pivot the "pivoting reed section" so that the yarn comes close to, but doesn't quite touch, either the peg to the left or the peg to the right. Now tighten the wing nut under the pivoting reed. This shouldn't need to be readjusted until you are using yarn of a very different size.

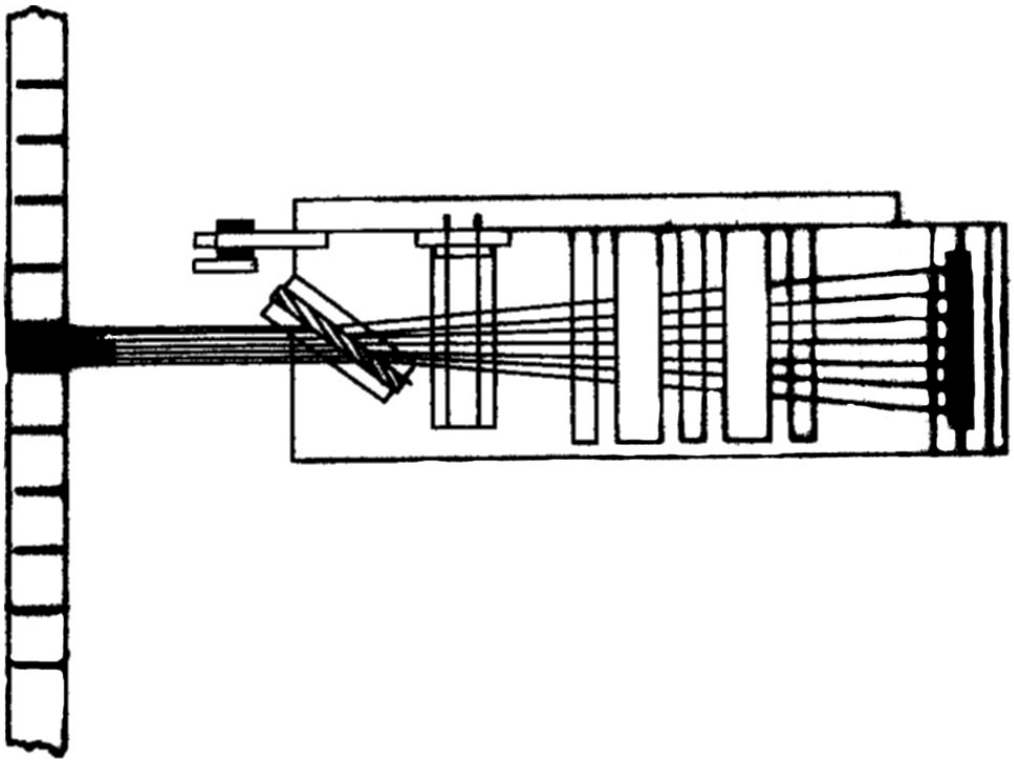

Figure 10 - Adjusting the size of the section

Extra care to correctly center and adjust the width of each warp section will result in more perfect tension while weaving.

Make sure that the threads are going on to the beam in flat layers. If you notice that warp piles up at the pegs, the section of the warp is too wide. If the warp falls down at the pegs, the warp section is too narrow.

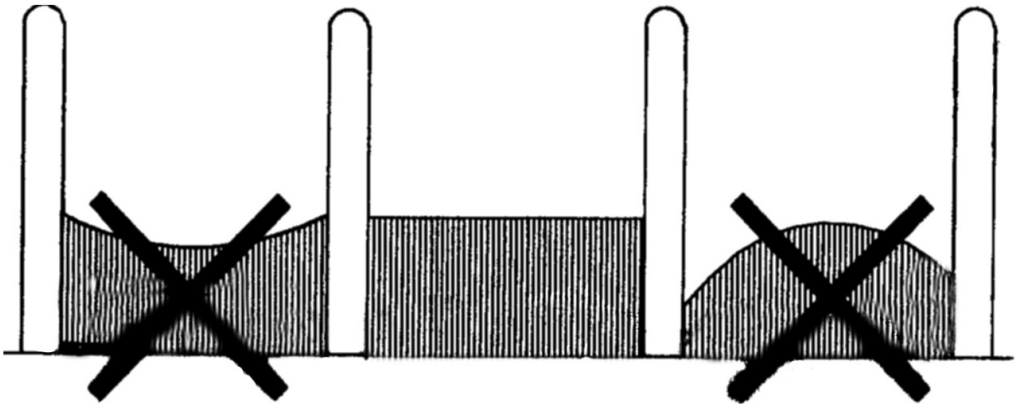

Figure 11 - Have flat layers in sections

If any of the above is happening, go back and pivot the front reed on the tension box again until you get perfectly flat layers. This is very important, otherwise you will end up having different length threads in one section, since the circumference of the beam within the section is not going to grow evenly. Therefore, you will end up having lots of tension problems.

Counting Turns or Yardage

To determine the length of the warp you are putting on the beam, you need to count either turns, revolutions, or yards.

To count turns, you can do it in your head, but it is more reliable to use a digital or mechanical revolution counter.

Counting revolutions even with a digital counter will still give the approximate warp length only, because the circumference of the beam will increase slightly with each rotation. This is called beam build up.

To count yards with a yardage counter while warping the sectional beam, you need to place the yardage counter at the front of the tension box. You should use an extra thread for measuring yardage, because if you use one of the threads from your warp section, that particular thread would have a different tension once you start weaving. The extra thread you use for measuring purposes only can be reused for each section.

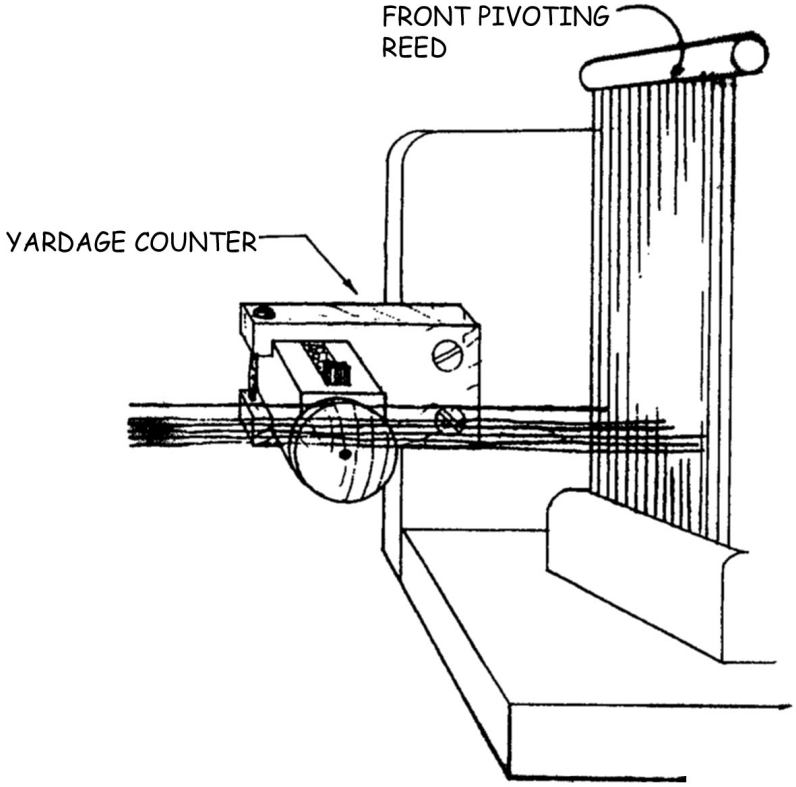

Figure 12 - Attaching Yardage Counter to Tension Box

Creating the Cross

When there is about a half-yard left to be wound onto the beam, it is time to make the threading cross. Simply push on the rear heddle frame of the tension box, making half of the threads go up and the other half go down.

Now slip in an 8" piece of contrasting thread (called a marking thread) through the opening (called a shed) created between the threads above and the threads below. Locate this marking thread about half way between the tension box and the separation roller.

Now push on the front heddle frame, making the other half of the threads go up. Now take one end of your marking thread and bring it through this shed. The two ends of the marking thread should now be together. Tie them in a

bow knot. Wind the rest of the first section on, cut the ends, and secure to the wound on thread using a rubber band over the pegs.

Continue winding all the sections in the same manner by moving the tension box along its track.

Inserting Sticks in the Threading Cross

When all the winding is complete, remove the rubber bands, unwind a few feet of warp, and slip one lease stick through the path created by the upper portion of each marking tie. Now slip another lease stick through the path created by the lower portion of each marking tie. Secure the lease sticks together, leaving about 2" between them, using masking tape or string through the end holes of the lease sticks. Now bring the lease sticks, with the warp ends, around the separation rollers.

USING THE WARPING WHEEL

The Setup

1) Adjust height so position of mini-raddle is just below eye level.

2) Adjust the wind-off tension with toggle and cord. Tie cord to prevent slipping.

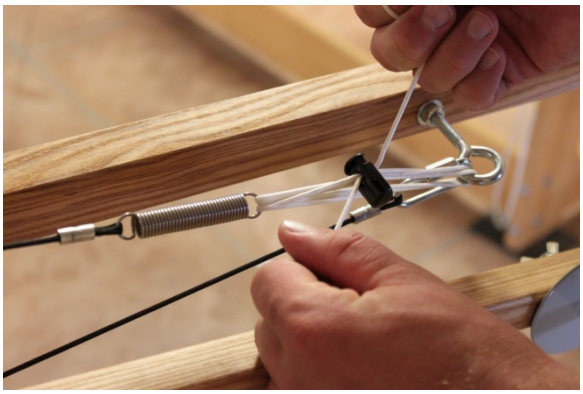

Figure 13 - Adjust Wind-off Tension

3) Adjust Warp Length using different spool placement by moving the spools on the arms.

4) Reset the Revolution Counter to Zero.

5) Setup Cones with the Cone Caddy.

Making the First Section

6) Open and secure the raddle top using the removable pin.

7) Slide the thread(s) under the metal catch clip, tails facing to the left. Tails should be about 5 inches long.

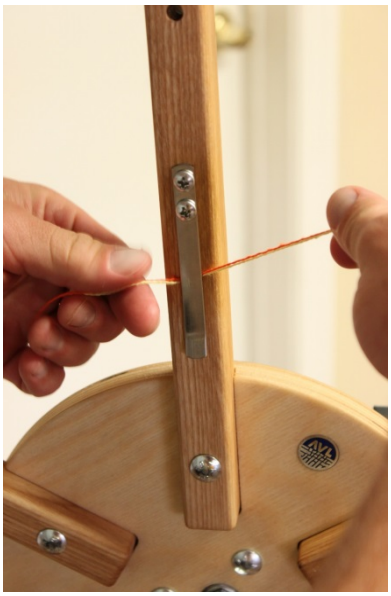

Figure 14 - Catch Thread Ends

8) Bring the thread(s) up and over the left side of the top spool so that you are ready to wind the Warping Wheel in a counter clockwise motion.

Figure 15 - Wind Counter Clockwise

9) After you have wound one length bring the thread(s) around the back of the raddle and through a dent (working from right to left).

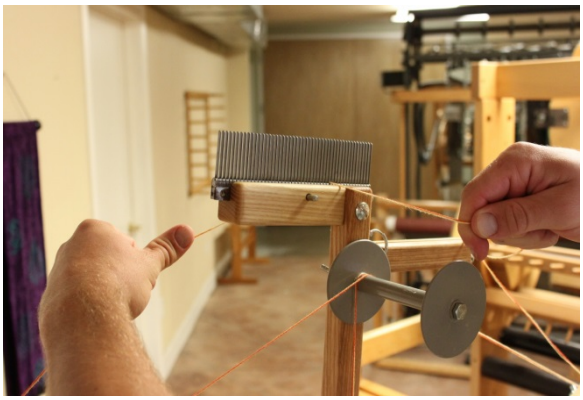

Figure 16 - Bring Thread Through Raddle

10) Bring thread(s) down over the end you just wound and secure in the silver clip (swooping under from left to right).

Tying Off

11) Put the raddle top back on. Cut the bout threads just to the left of the clip and under the threads going over the wheel.

12) Hold onto the threads securely at the raddle (so they don't slip through. Below, wrap the cut threads around the clip.

Figure 17 - Hold Threads at Raddle

13) With the raddle top secure, remove the pin from the raddle holder while holding onto the threads.

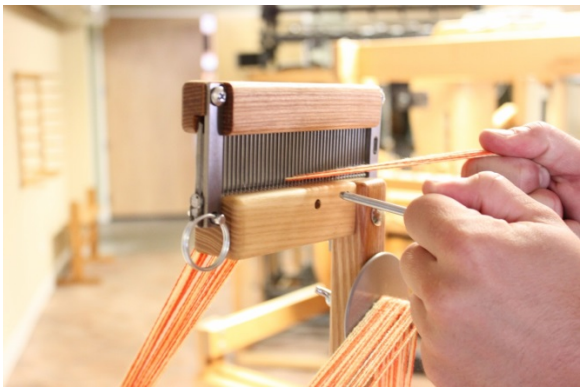

Figure 18 - Remove Raddle from Top Position

14) Bring the raddle down to the winding-on position and secure with the pin. Tie a knot in the thread past the raddle so it won't slip through.

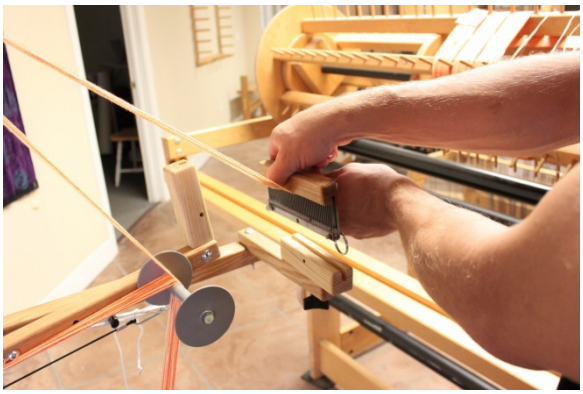

Figure 19 - Place Raddle in Lower Position

15) Take the extension cord from your beam. Create a larks head loop at its end and loop it around the knotted end of your warp section.

Figure 20 - Place Extension Cord Around Thread Bundle

16) Before the last part of the threads pass through the raddle, tape the threads on the loom-side of the raddle in their sequence using

masking tape. This will help you keep the threads in order when you thread the harness.

17) As you wind on, pivot the raddle to adjust the width of the section to fit exactly in-between the pegs on your sectional beam.

Figure 21 - Pivot Raddle

READJUSTING THE TENSION

Now tie the lease sticks from the top of the loom so that they are at eye level when you are in your threading position.

To keep the warp from slipping forward during the threading process, rewind the tension rope around the pulley and tension drum and clip the rope end to the spring. Remember to replace the tension weight at this time.

COMBINING SECTIONAL AND PLAIN WARPING

Depending on your equipment and preferences, you may prefer to wind separate warp sections on a warping board or reel and go from there directly to the Sectional Beam. If you decide to do this, however, your warp will be limited in length by what will fit on the warping board or reel. If you choose this method, follow these steps:

1) Calculate the number of threads for each section on your Sectional Beam.

2) On the Warping Board or reel, make “baby warps” for each section on your Beam.

3) Make crosses at each end: raddle cross on one side and thread-by-thread cross on the other.

4) Take the warp off the board or reel by taking off the thread-by-thread cross first.

5) Put the warp threads from a first "baby" warp in the Raddle, making sure that threads are spread evenly and that they are creating flat layers when wound on the Beam. Put the raddle top on or secure warp threads with rubber bands.

6) Instead of a regular raddle, you can put a mini-raddle in place of the front reed on the Tension Box. In this case, the Tension Box is used only for guiding threads into the sections. It is not necessary to sley threads in the Tension Box, either through the harnesses or through the back reed, and you do not need to adjust tension with the Pegs.

7) Attach each baby warp to the Extension Cords and proceed as in regular Sectional Beaming procedure.

8) Since you are not using the Tension Box for tension, be sure to keep it taut manually.

9) When you come close to the end of the section, take the reed cover off and continue winding the rest of the baby warp.

10) Secure that section to the Beam and continue to the next one.

If you wish to use the Tension Box to maintain tension on your warp during the Wind-On phase, it will be necessary to make a Cross at both ends of your warp. If you can make your warp slightly longer, you can use the extra length to leave in your Tension Box for the purpose of tying on the subsequent sections.

USING TWO BEAMS

There will be times when you will want to use more than one warp, which cannot be put together on one beam.

You will have to put them on separate beams or use some kind of separate tension systems.

WHEN DO YOU NEED TO TENSION YOUR WARPS SEPARATELY?

When weaving:

- Very different size yarns.
- Yarns with different stretching qualities.
- Different densities.
- Different structures.
- Supplementary warp techniques (because some warp threads do not interlace as often as others).
- A group of special yarns for selvedges and borders.
- Loops, piles, or puckers like seersucker.
- More then one layer with different setts in each layer.
- More than one layer with a different pick count in each layer.

SETTING TWO BEAMS

The process of setting up a second beam is the same as setting up one beam. You need to be careful not to mix sequences between the beams. It will also take more time to setup two beams rather than one.

1) Wind each warp on the beam the same way you would do it if there were only one beam on the loom (plain or sectional). Make a cross and have a pair of lease sticks with a cross in each warp.

2) Bring the warp with the lease sticks from the top beam around and under the top separation roller.

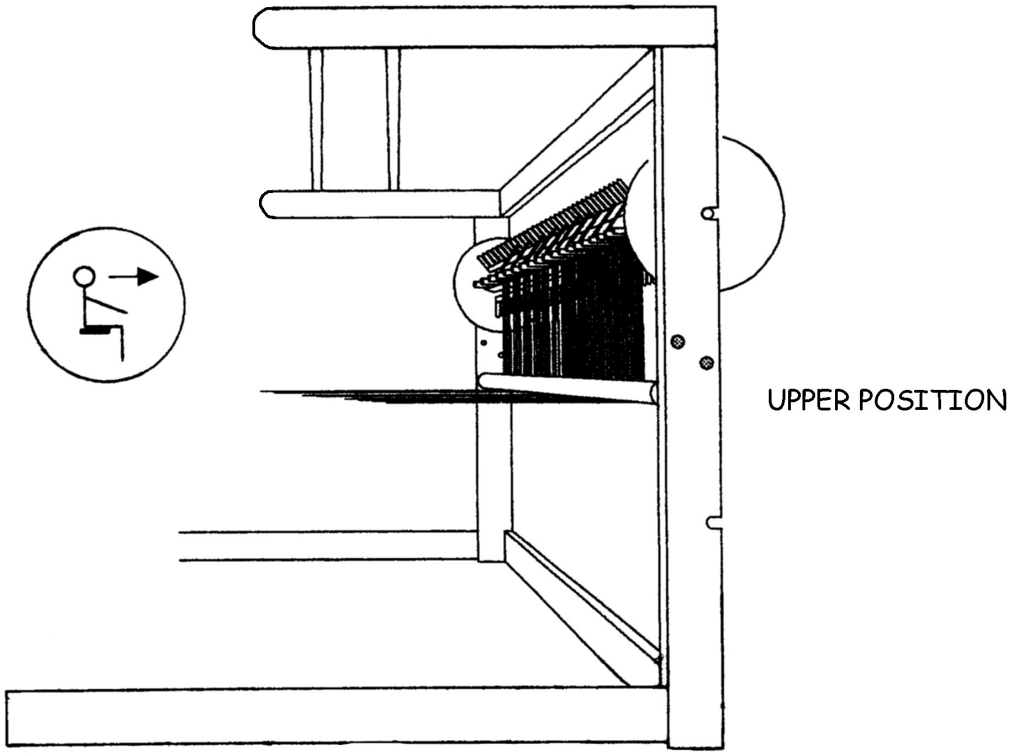

Figure 22 - Routing of Upper Sectional Beam Warp

3) Bring the warp with the lease sticks from the bottom beam around and above the bottom separation roller.

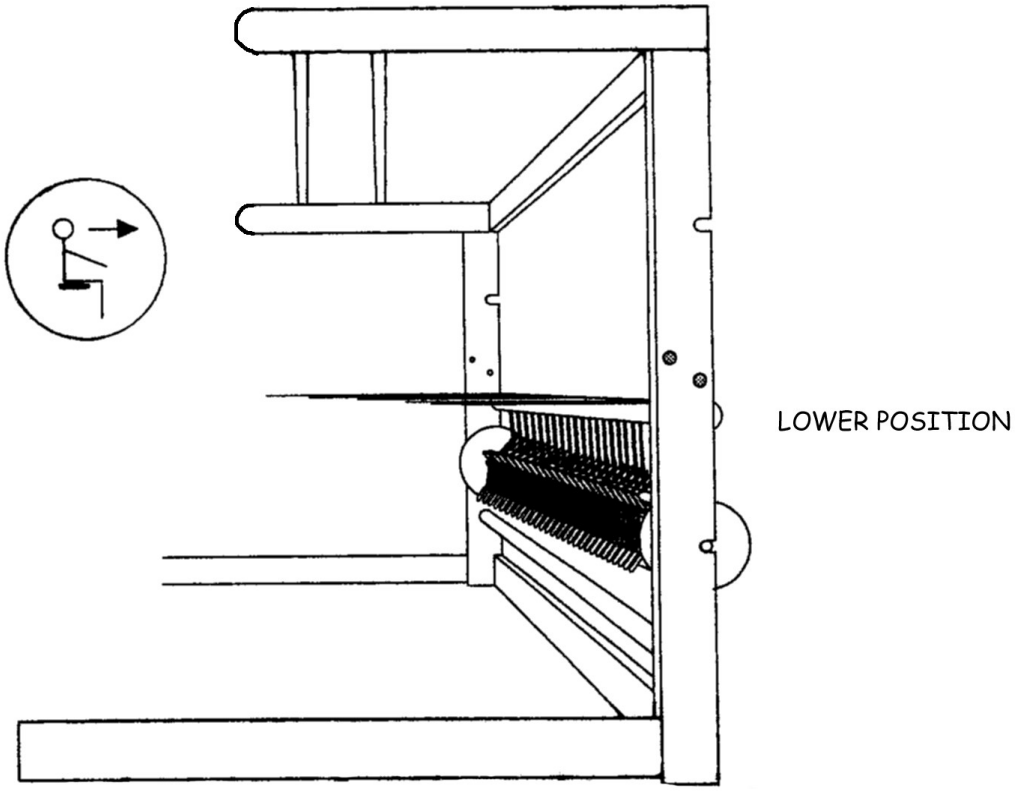

Figure 23 - Routing of Lower Sectional Beam Warp

4) Hang both pairs of lease sticks, one a little above the other, so you can see each lease from the threading position.

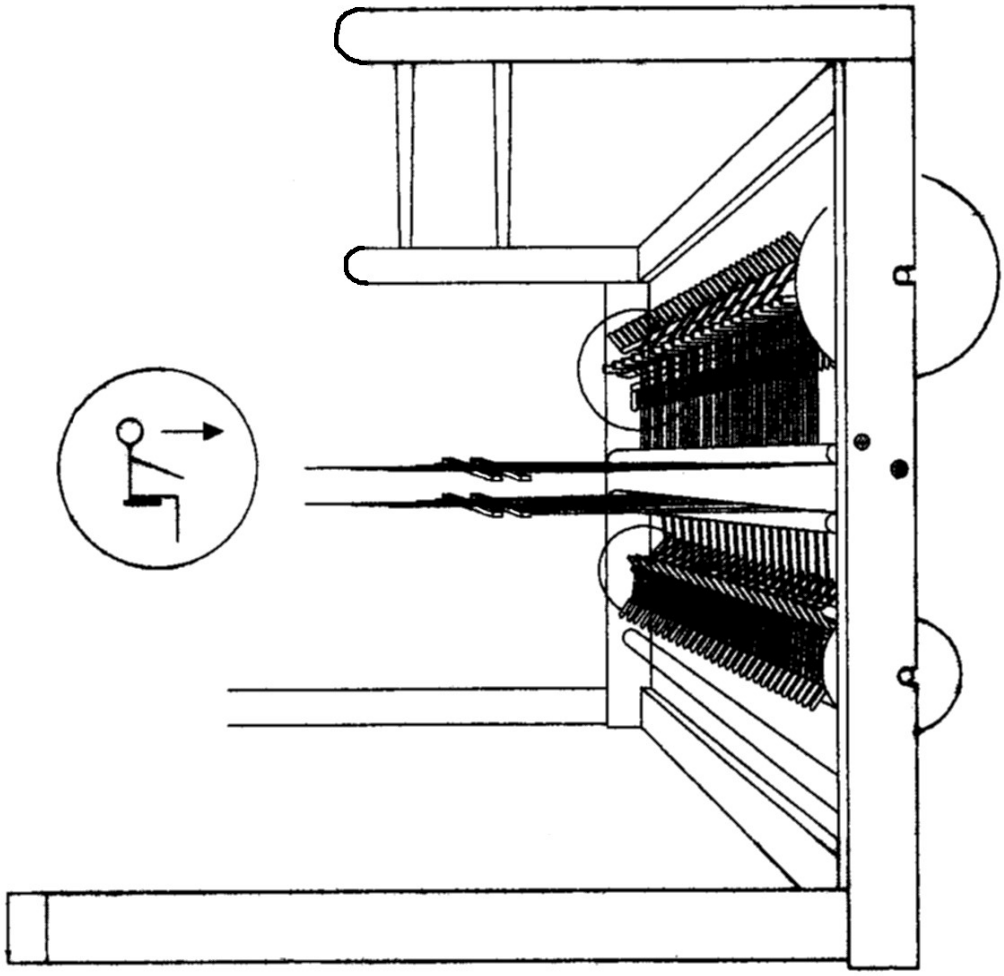

Figure 24 - Two Beam Warp with lease sticks

5) Proceed with a threading as if you were only working with one beam. Follow your threading instructions and take special care which thread from which pair of lease sticks comes next.

MORE THAN TWO WARPS, SEPARATE TENSIONING

If you do not currently have two beams, or you need more than two separate warps, you can weight and tension your additional warps separately on the same beam. Follow the instructions below.

1) Make your warp sections on the warping board and take them off the board in a chain, on a kite stick, or just in a plastic bag.

2) Make sure that each bundle is not too thick. You will know when you need to divide each bundle if you feel that all the threads are not being tensioned evenly.

3) The weight needs to have a strong loop of string on it so the warp bundles can be slip knotted into it. This makes it easy to undo the slip-knot and move the weight when it climbs up to the back beam and must be let down again.

4) The weight also needs to be adjustable. Plastic bottles, with handles, filled with water are perfect. You can also use fishing weights, washers, nuts, bolts. They are not as easily adjustable as water bottles, but take less space. The closer to the floor you can hang them, the less often you need to reposition them.

THREADING, SLEYING, AND TYING ON

ROUTING THE WARP

If you have a beam in the upper position, the warp will be routed under the upper separation roller.

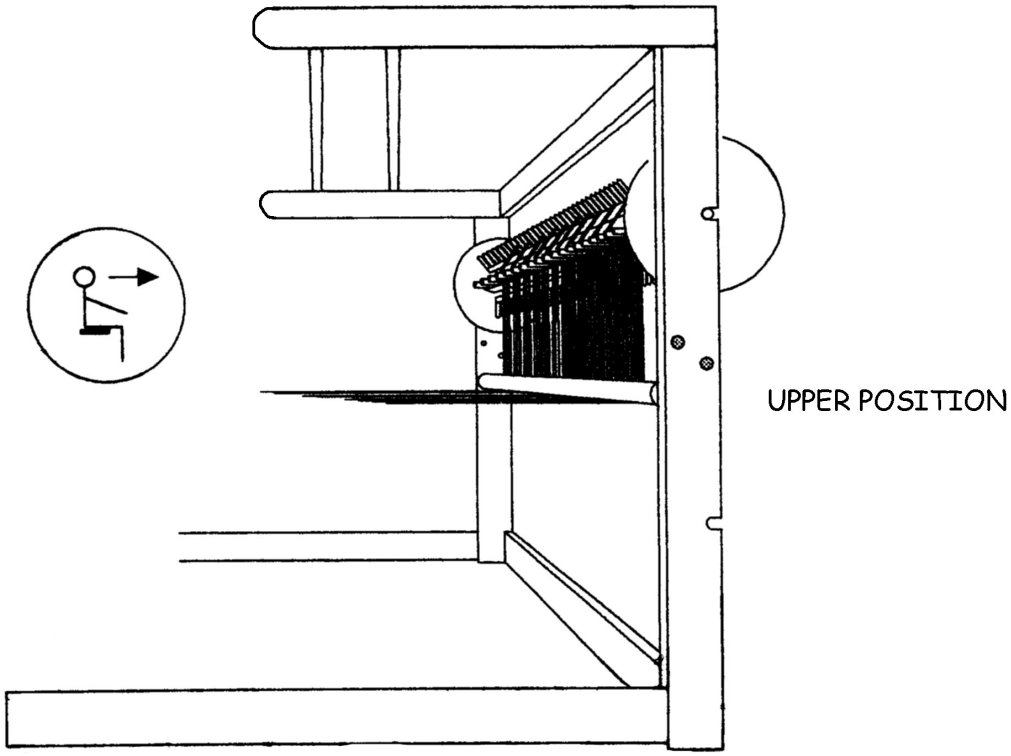

Figure 25 - Routing of Upper Sectional Beam

If you have a beam in the lower position, the warp will be routed over the lower separation roller.

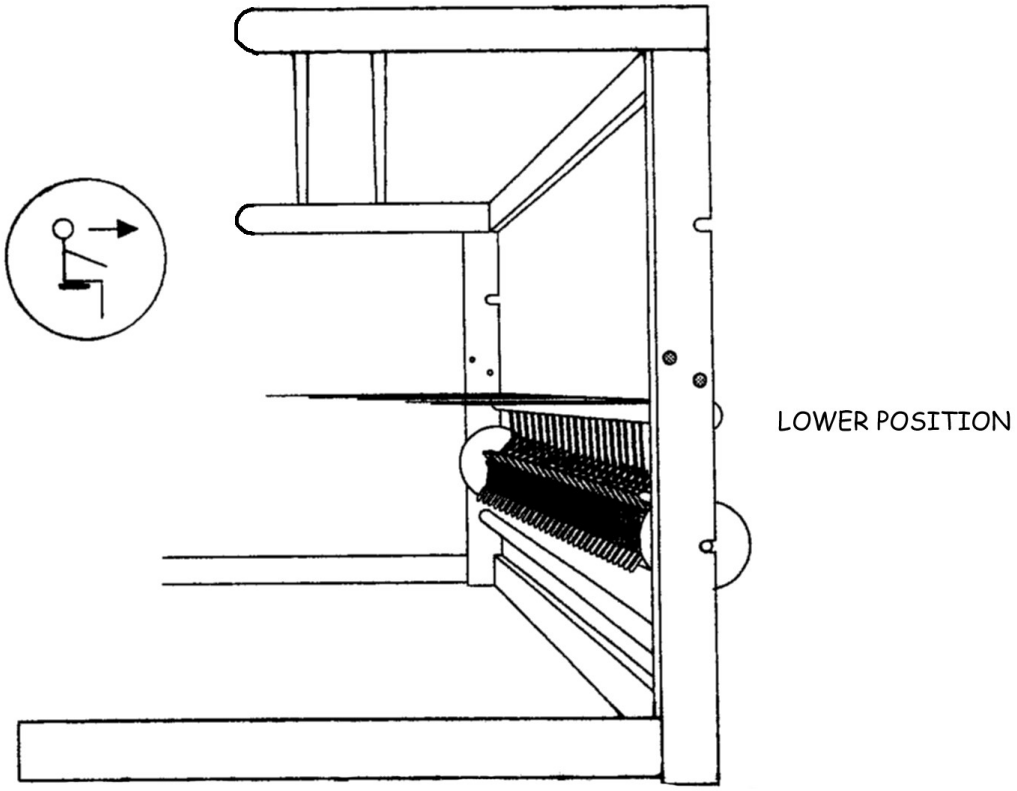

Figure 26 - Routing of Lower Sectional Beam

PREPARATION FOR THREADING

To prepare for threading, tie the threading cross sticks up to the rear harness pulley support with lengths of string so that the cross is in a comfortable and visible position for threading.

It is always worth the extra time to position everything so that threading will be as comfortable as possible. The important thing in threading is your comfort. Take the time to position everything so that your body feels at ease while threading.

THREADING POSITION FOR BOTTOM SWING BEATERS

First lift out the beater, then remove the front cloth beam by unscrewing the upper left bolt in the cloth beam support with a small wrench. Place the bench close to the heddles. Adjust the height of the bench so that you are in

the correct spot to comfortably thread the heddles. You may wish to raise the harnesses.

THREADING POSITION FOR OVERHEAD BEATERS

For those with overhead beaters, threading can be done with the overhead beater and cloth beam in place. If you have a sandpaper beam, place a cloth over the cloth beam so that the abrasive surface won't scratch you. You can also remove the cloth beam to get closer to the heddles.

Use the beater retainer to hold the beater in one position while you are threading. You can remove the beater top and reed for comfort.

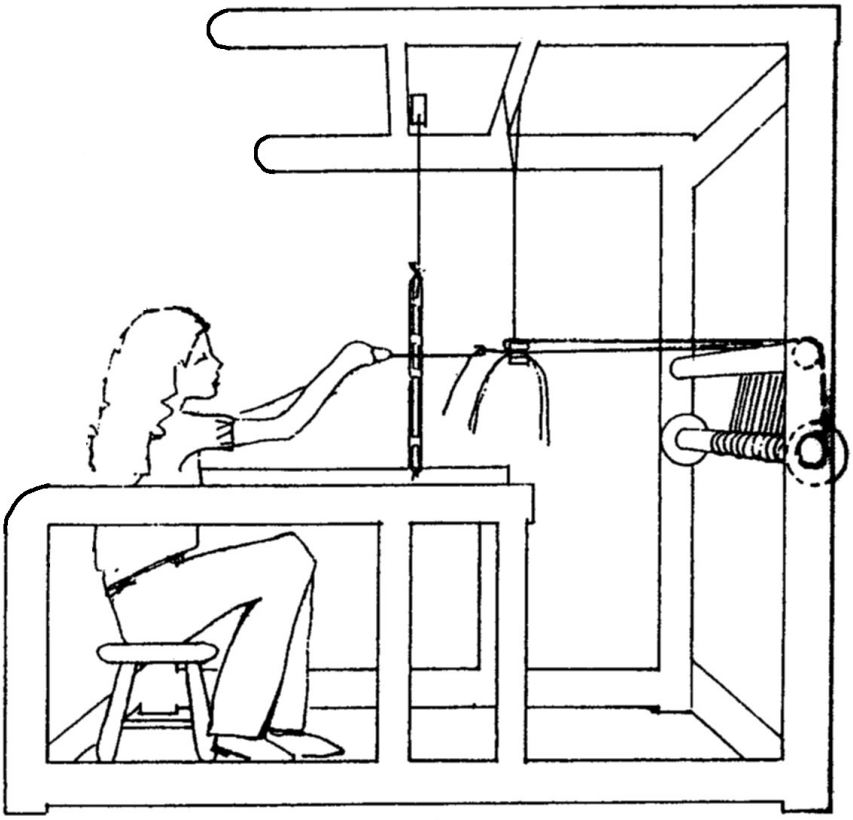

Figure 27 - Threading Position

RAISING THE HARNESSES

With an E-Lift and a Compu-Dobby

To raise all the harnesses, turn on the E-Lift, turn off the double shed action, and pedal once. It is not necessary to turn on the Compu-Dobby at this

time. Leave the E-lift on until you have finished threading the harnesses. Lower the harnesses before turning off the E-lift.

With Treadles and a Compu-Dobby

With the Compu-Dobby off, treadling the right treadle will raise all the harnesses. To keep them raised while threading, hold down the right treadle with a weight.

With a Mechanical Dobby

Pull the dobby arm down to the bottom of its slot. To secure the arm in this position, insert the steel stop pin that is hanging from the back of the dobby into the hole just above the top of the dobby arm.

On the bottom of the dobby unit are cable ends corresponding to the harnesses. In turn, pull each cable end downward on each cable into its slot in the arm, thus raising the harnesses. Make sure to lower the harnesses again when threading is completed. Never remove the stop pin from its hole while any harnesses are lifted as this will cause the harnesses to drop too rapidly.

THREADING THE HARNESSES

Now we're ready to thread the loom. If you are right-handed, it is recommended to start at the right side of the warp. Grasp one group of ends in your left hand and your sley hook in your right hand. Direct the "hook end" of the sley hook through the "eye" of the first heddle you need to thread. Pull the thread through (for example, if you had a straight draft on 8 harnesses, your first thread would go through the eye of a heddle on the 8th harness. The second thread would be threaded through the eye of the heddle on the 7th harness, the third thread through the 6th harness, and so on).

Unused Heddles

After threading is complete, make sure that the unused heddles are all pushed to the far sides of the harness sticks between the screw eyes and the ends of the harness sticks. For balance, there should be approximately equal numbered groups of unused heddles on both sides of each harness. In some cases such as a very wide warp with a lot of unused heddles on the ends of the harnesses, you may need to tie each group of unused heddles into a tight bundle with tie tapes or string to keep them from falling off the ends of the harness sticks or you may need to take heddles off the loom. What some

weavers do with wide warps, in order to avoid having to take off extra heddles, is to distribute the unused heddles among the threaded heddles as the threading is taking place.

Note:

In the first six months of using a new loom with polyester heddles, the heddles may stretch out slightly to adjust to the harnesses.

SLEYING THE REED

Now sley the warp ends through the reed. Some weavers start from the right side; some from the left; some in the middle. But, in all cases, be sure to measure accurately before starting so that the warp will be centered in the reed (or offset 4" to the right if the warp on the beam is already offset). Weavers have various ways of positioning the reed for sley.

TYING ON TO THE CLOTH STORAGE APRON

Note:

You can skip using an apron altogether if you are planning a short warp and are going to have your cloth build up around your cloth beam. Follow the instructions in the next section.

Now that you have your warp ends ready to tie, we need to prepare the apron. The ends will be tied to the apron rod.

1) Notice that the apron has 2 hemmed ends. One end has openings in it and the other end has a plain hem with velcro (hook side). The Cloth Storage Beam also has a velcro strip.

2) Measure to find the center of the Beam and, using tape, mark the center above the velcro strip.

3) Find the center on the apron, at the end with the velcro and fold it in half, with the velcro doubled on itself and facing out.

4) Match center of your fold to the center of the Beam velcro, with the apron length hanging to the floor.

5) Press the velcro strips together firmly, while pulling gently toward each side of the beam, making sure it is centered.

6) Then wind the apron once around so that it holds itself in place.

7) Route the apron through the loom to meet the warp ends. This is done by bringing the free end of the apron over the treadle pulley assembly and around the bottom and front end of the lower cloth roller then up and around the upper cloth roller.

8) Bring it up to and around the front of the cloth.

9) Spread it out flat and center it over the cloth beam and insert the metal rod into the hem.

10) Now tie the ends to the metal rod. Starting from the middle, bring the first bundle toward you over the apron rod, then around and under it. Divide it in half and bring one half up on each side of the bundle. Use the ends to tie a surgeon's knot. It is the same as the first tie you make tying a shoelace, except you loop the end through twice. This kind of knot is very good for readjusting the tension.

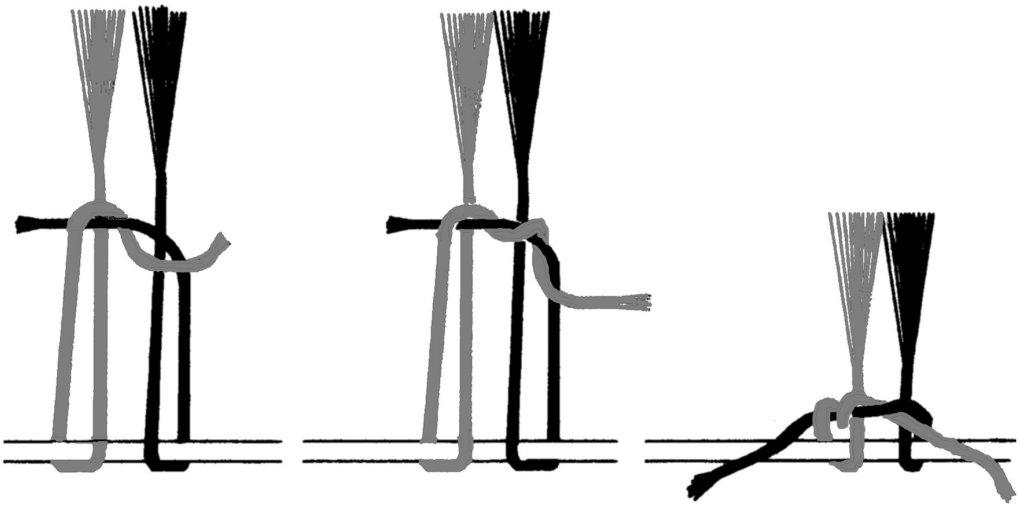

Figure 28 - Tying onto the apron

11) Start with one section in the middle, then the far right and the far left outside ones. Work your way in.

12) By now, the sections that were tied first are quite a bit looser than the ones tied last. To correct this, you do not need to untie the knots, simply grasp the ends and pull them away from you, then re-tighten the knots.

13) Repeat this until all of the sections are at approximately the same tension.

WRAPPING THE WARP AROUND THE SANDPAPER CLOTH BEAM

If you are not using the cloth storage beam, follow these instructions.

1) Wind the warp beam forward (raise the tension arm while doing so) until enough warp is released so that the warp ends will extend about 12" past the cloth beam.

2) Now take a group of ends about 3" wide with one hand and use the other hand to comb them “flat”. This can be done using a common hair comb.

3) Starting at the reed, gently comb the yarn toward the ends until the yarn is flat and spread out.

4) Now gently pull with the other hand to give it a little tension and lay it over the abrasive surface of the cloth beam.

5) Repeat this procedure all the way across the warp.

6) Now that you have nice even tension, you can wrap the ends (that were hanging down) around the bottom of the cloth beam.

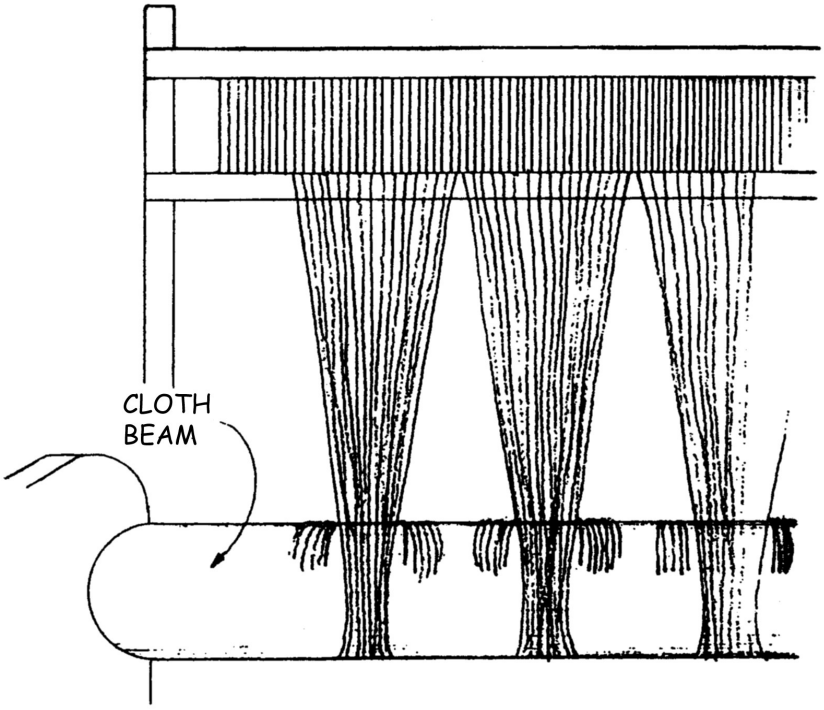

Figure 29 - Wrapping Warp Around the Cloth Beam

This method is fast and usually quite accurate. However, there are certain warp materials that are not suitable for this method. In that case, simply tie onto the apron as instructed above.

NOTE:

The shortcut method does not work well with chenille. In fact, if you will be weaving with chenille warps regularly, we recommend the use of a "softgrip" cloth beam covering. This can be ordered through AVL.

TYING ON TO AN OLD WARP

A new warp can be tied on to an old warp if the new warp uses the same threading pattern and E.P.I. as the warp that is on the loom. While tying on can be slow at first, it is generally faster than threading and sleying the loom. This process is especially good for production weavers. It takes less concentration and there is less chance of making mistakes in threading.

The tying on process starts when you are finishing the last warp on the loom.

1) Before you cut off the fabric, make sure to leave enough unwoven warp to extend one foot behind the harnesses, through the heddles, and about 6" past the reed when the beater is in its rear position.

2) Now open two opposite tabby sheds and insert the lease sticks into these sheds behind the harnesses.

3) Secure the sticks together with tie tapes through the holes.

4) Now carefully cut the fabric from the loom and tie bundles of warp coming through the reed together so the yarn can't slip through.

5) Cut the warp in back (leaving one foot past the lease sticks) and also tie bundles of yarn together for security.

6) After winding on the new warp on the beam, you can sit on a small stool placed in-between the harnesses and the back of the loom and tie corresponding yarns from the two sets of lease sticks together. An overhand or weaver's knot work well. This may seem slow at first, but you will work up a faster rhythm with some practice.

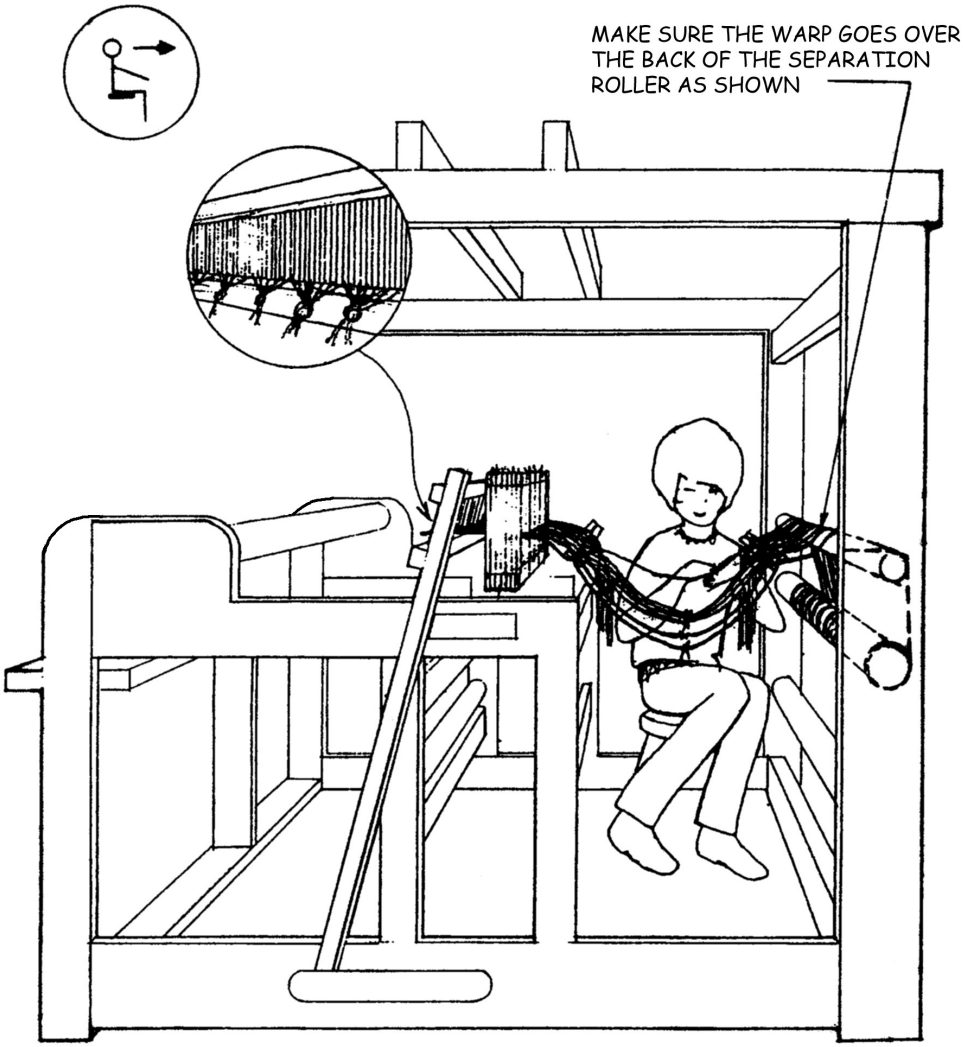

Figure 30 - Tying on a New Warp

7) When all ends are tied together, go to the front of the loom and gently pull on the bundles of yarn going through the reed to pull the new warp through the heddles and reed. Then either tie on to an apron or simply wind the ends around the front cloth beam.

SETTING TENSION

USING THE TENSION DEVICE

Warp tension on a full frame AVL loom is controlled automatically by a special weighted tension arm which insures a constant and even tension at all times. The tension is easily adjusted and the warp beam is released automatically as the cloth is advanced.

Note:

You have the option of replacing the tension device with a locking brake. If you choose this option, the brake needs to be pressed in order to release warp from the warp beam.

You should already have the cord wound around the tension drum and the cord end clipped to the spring. This should be done before winding the warp on to the plain beam to prevent the warp beam from turning backwards while winding on and threading. In the case of the sectional beam, the cord is entirely unhooked and unwound from the pulley and drum during the warp winding process. Then it is rewound and clipped on to the spring just prior to threading. The cord should make 3 turns around the drum and must start from the correct position. Always check to make sure the cord has not crossed over itself.

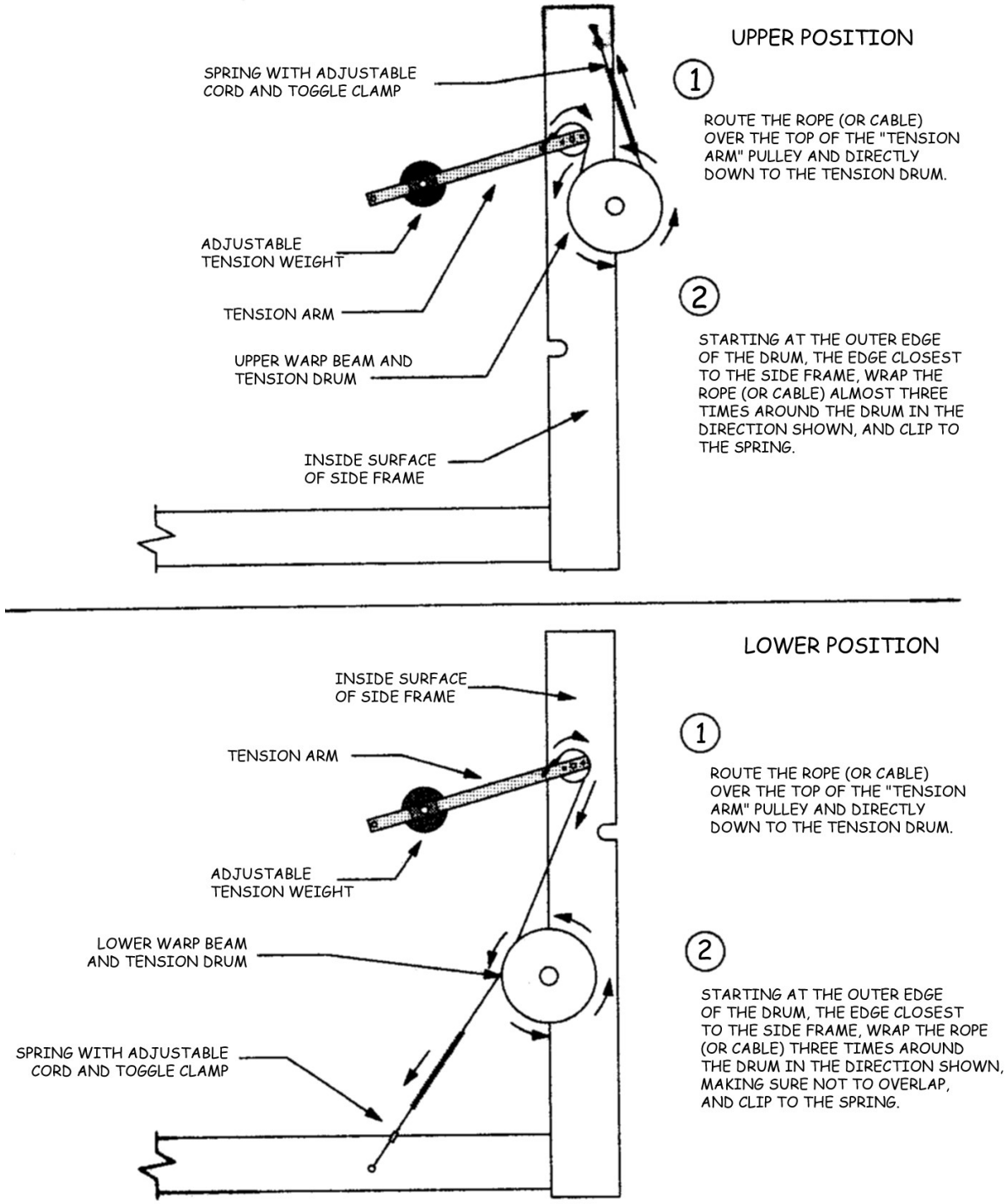

Figure 31 - Tension Device

1) To set the warp tension, move the weight to its rearmost position (next to the wooden pulley).

2) Wind the warp forward slowly, using the ratchet handle on the cloth beam.

3) Continue winding until the weighted tension arm rises and stops when the rope slips on the brake drum.

Ideally, the tension arm should rise (as you advance the warp) to about 45 degrees above horizontal, then slip and rest at an approximately horizontal position. If it stops above horizontal, let the adjusting cord out at the spring. If it stops below horizontal, shorten the cord. The length of the adjusting cord is changed by squeezing the ends of the small plastic toggle clamp together and then pulling the cord through it.

Now feel the warp for tension. If the warp is too loose, set the weight further out on the arm. Wind the warp forward a little and check it again. Once you feel you have the proper warp tension, make certain that the tension arm is rising and slipping correctly. If it isn't, tighten or loosen the adjusting cord as needed. You will find that you can weave with less warp tension with a weight control than with the conventional ratchet system. Once the correct tension adjustment is made, it will be maintained automatically as the weaving is advanced. For light, fragile warps, it may be necessary to use a lighter weight than the one that comes with the loom and for dense, heavy warps, you may have to add some weight to the arm. You can order half size weights from AVL Looms. This can be used by itself for very light tension or can be used with the existing weight if more tension is needed.

USING THE RING TEMPLES

The Temple System is used to maintain a good selvage and prevent draw-in. You'll usually deploy it after you've woven-off some fabric, once you have selvage enough to work with. It consists of two rollers (barrels), one on each side of the fabric, which grab the selvage and prevent it from drawing in.

Note:

Instructions on installing the ring temple mount are in the assembly guide for the A-series loom.

1) Your fabric should rest on top of the guide and come near the end of the temple mount bracket.

2) Once this is in place, it's time to put on the ring temples.

3) Make sure to have one washer on the rod, place the rod through the slot of the mount bracket. This slot gives you the choice of how

much tension is needed depending on the type of fabric you're weaving.

4) Now put on another washer and then the nut.

5) Leave a little loose and mount the other side following the same procedure.

6) Once both sides are in place, you're ready to adjust to the perfect tension.

Figure 32 - Ring Temple on Fabric

7) Press down on the ring temple until you're comfortable with the tension and tighten the nut securely.

8) Now adjust the other side in the same way.

9) When all is set, take a quick look (and feel) and make sure everything is very tight. This is very important in order to not have it loosen later.

Using a temple system is somewhat of an art and opinion varies amongst weavers about things like the choice of rings. In fact, there are many rings to choose from -- some with large spikes, some with shorter. Call AVL for details.

WEAVING PROCEDURES

WINDING BOBBINS

If you have flyshuttle boxes on your loom, you received flyshuttles and bobbins with your loom. Use these instructions to wind the bobbins. These instructions will also apply if you bought shuttles from AVL. If you are using shuttles from another source, refer to the instructions for those shuttles.

AVL shuttles use stationary, open end bobbins. The advantage of using this type of bobbin over the conventional spinning bobbin is that as soon as the shuttle is caught, thread stops coming off the bobbin, whereas the spinning bobbin tends to keep spinning and unwinding thread even after the shuttle is caught. The stationary bobbin allows the weaver to more easily obtain a clean selvage edge.

Stationary bobbins are wound differently than spinning bobbins. They are not wound back and forth from one end of the bobbin to the other, but in layers from one end to the other.

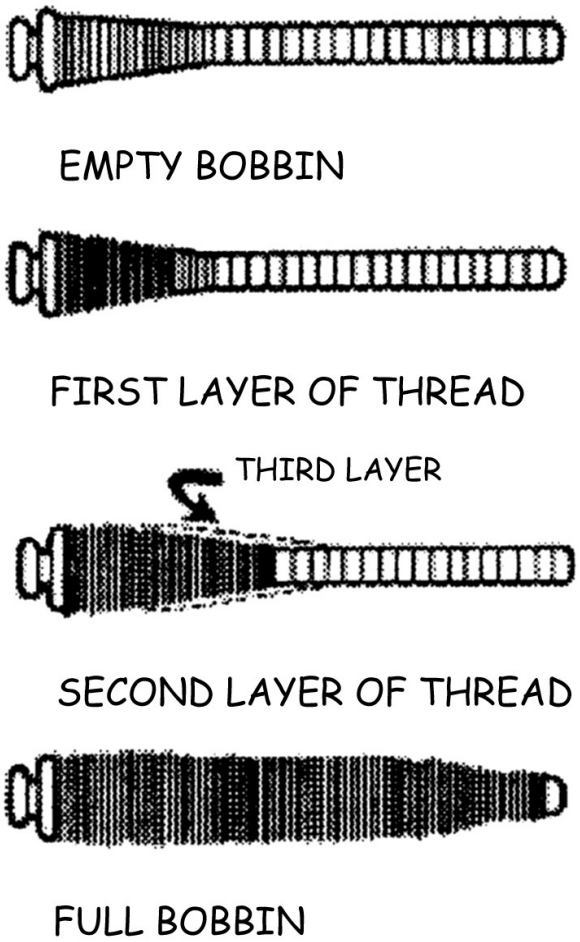

Figure 33 - Winding the Bobbin

Use a standard size bobbin winder. A hand winder will work, but an electric one is more efficient. Using some sort of tensioning device is ideal since the thread should be wound very tightly (wearing a heavy leather or fabric work glove will help you to pull the thread tighter).

You should hold the tensioning device with your dominant hand for easy positioning of the thread onto the bobbin. With your other hand, hold the thread for tension purposes only.

Note:

The hand holding the thread should have a glove on it for safety as otherwise you may experience thread burns. If you don't want to wear a glove, take a piece of scrap leather and hold the thread with it.

1) Make a few winds of the thread over itself at the far end of the bobbin (the end near the large coned shaped part) and then place it on the winder.

2) To start, wind a thin layer going back and forth in one area, about 2" long at this far end. It should cover three quarters of the cone shaped part of the bobbin. Consider this the first layer of thread.

3) Then move down 1/4" and start a new layer which will overlap 1-3/4" of the last layer.

4) For each layer, wind the thread tightly and quickly back and forth covering a 2" area until that layer is complete.

5) Then move down 1/4" and start a new layer which will overlap 1-3/4" of the last layer.

6) Keep repeating these tapered overlapping 2" layers until there is 1/2" left at the end of the bobbin. You will soon learn when each layer is complete.

If the layers are too fat, the bobbin won't fit into the shuttle. If they are too thin, you won't get as much thread on the bobbin and it will have to be changed sooner.

Wind many bobbins at once so it won't be necessary to stop and wind bobbins while weaving.

A properly wound bobbin is essential to the correct operation of the flyshuttle. If the weft thread does not come smoothly off the bobbin, if the shuttle jerks and pulls the selvage edge too tightly, or if the shuttle fails to move lightly across the shuttle race, an improperly wound bobbin is likely

the cause of your trouble. If a bobbin is not working properly, do not waste time trying to correct it. There is nothing you can do about it. Place it aside and use another bobbin.

USING THE AVL BOBBIN- WINDING GUIDE

The AVL Bobbin-Winding Guide (BWG) can help you to create a perfect size "package". It will allow you to get as much yarn as possible on the bobbin, but it will not touch the side of the shuttle. One critical element in winding a bobbin is to maintain a uniform diameter of yarn around the bobbin.

The AVL Bobbin-Winding Guide should be used with a bobbin winder equipped with a foot switch because the guide should be held with one hand while the other moves the yarn back and forth.

First, it must be noted that at all the basic principles for winding an end-feed bobbin apply to the BWG. That is, feed the yarn in small increments from the cone end to the small end of the bobbin.

Figure 34 - Bobbin Winding Guide

You will begin winding at the flared cone end. Feed the yarn through the BWG's slot and push the guide toward the cone end. Keep the slot facing you so that you can observe the yarn as it winds onto the bobbin and make any necessary adjustments.

Turn the bobbin winder on, slow at first, then up to full speed. Swing the yarn from side to side and try to keep as strong tension as possible on the yarn. For the most part, the tighter the better. When holding the BWG with your left hand while winding the bobbin, give some resistance to the left. Do not attempt to move it to the right side.

As the yarn builds up on the bobbin, it will naturally push the BWG down toward the end. The pressure on the BWG should be just enough to keep it in contact with the yarn underneath. Be careful not to overwind at the end because it can cause extra loops which can get tangled in the tip of the shuttle. You should stop winding when the right side of the BWG reaches the end of the bobbin.

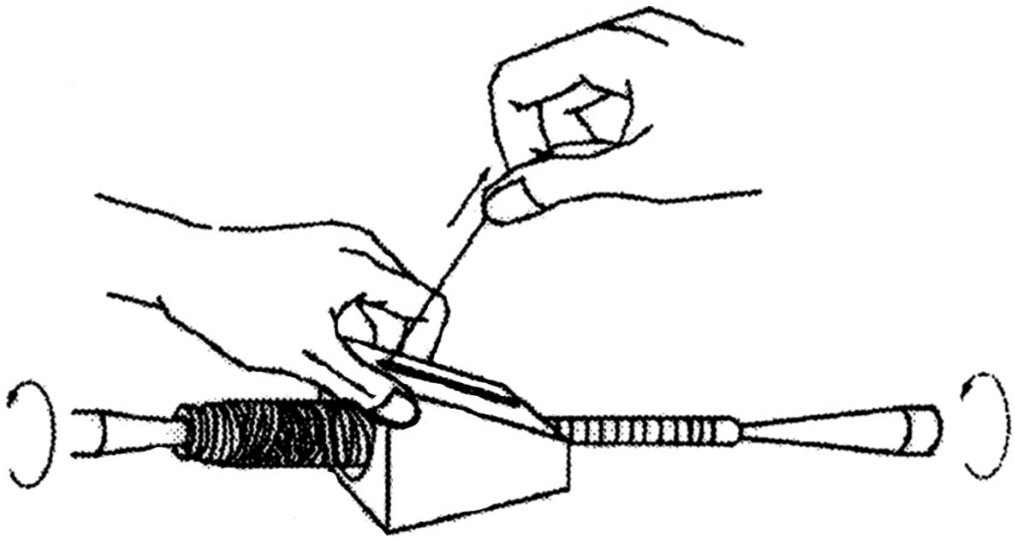

Figure 35 - Using the Bobbin Winding Guide

Placing Bobbin in The Shuttle

Pull up the metal rod in the middle of the shuttle and slip the large end of the bobbin onto it (it might be a little stiff at first) and then push the bobbin all the way down to the end of the rod so that the groove in the end of the bobbin straddles the retaining pin in the bottom of the shuttle.

Feeding the Shuttle with Standard Tensioner/Adjusting the Tension

Uncoil some thread from the front end of the bobbin and push it down between the two metal plates of the tensioning device. Slip it down the groove that runs toward the point of the shuttle and out the hole in the side.

The tension device on the shuttle can be adjusted by turning the screws inside the holes on each side of the shuttle with the screwdriver provided. For fine yarns which need a tighter tension, turn the screws so that the metal plates are tight against each other. For large yarns, loosen the screws so that the metal plates loosen up.

Throw a few weft shots with the shuttle and then check your selvages. If the selvages are too loose, increase the tension. If the tension is too great and

the selvages are drawing in, reduce the tension. It may take a little experimenting to get it just the way you want it.

Feeding the Thick Yarn Shuttle/Adjusting the Tension

If you have an AVL shuttle with two tension springs and plates to hold the yarn, to thread it simply pull the filling thread off the end of the bobbin. Use a small hook (perhaps a crochet hook or make one from a paper clip) to get the thread in between the plates and through the side hole.

The tension adjustment is just the same as in the shuttles with a standard tensioner. The only difference is that instead of the screwdriver, you will be using an allen wrench for the adjustment. This kind of shuttle with the spring tensioning system is especially useful for novelty yarns where diameters of the yarn changes across the yarn and, therefore, more flexibility is needed.

TO REMOVE OR TO CHANGE THE REED

1) Remove the beater top and then loosen the bolts on the reed support.

2) That will loosen up the reed support and allow you to remove the reed.

3) Place the new reed in the slot created by the reed support.

4) Tighten the bolts on the reed support.

5) Place the beater top on the reed and tighten the bolts.

On a flyshuttle beater, it is essential that the reed stays in perfect alignment with the shuttle race or else you'll have flyshuttles flying across the room.

USING THE BEATER

The AVL loom's beater is designed to increase weaving speed. It has a light and easy action and little physical exertion is needed to operate it. Weaving can be done for hours without tiring the weaver. With a properly wound bobbin and a little practice of the throwing technique, selvage edges turn out smooth and even.

THROWING THE FLYSHUTTLE

It's going to take a little practice to learn to throw the flyshuttle. In the beginning, you should only be concerned with learning the technique described below. Practice each step slowly and carefully. This will form good habits which will become automatic and then, that the speed will come.

You should practice at first with an empty bobbin and then with weft thread when it starts to go a little smoother.

1) Push the beater away from you to its rearmost position, place the shuttle on the shuttle race and slide it into one of the shuttle boxes so that it pushes the picker as far as it will go to the end of the box.

2) The hole in the side of the shuttle through which the weft thread passes should generally be facing the weaver.

3) Place your dominant hand on the flyshuttle handle and the other hand in the center of the beater and open the shed.

4) To send the shuttle along the shuttle race and into the opposite box with the single box flybeater, make a short quick wrist movement with the handle in the direction the shuttle is to travel. With a multi-box flyshuttle, pull down the handle.

5) Beat the fell of cloth with the hand that is on the beater. Keep the body relaxed and do not waste energy by moving your body backwards.

6) Now close the shed.

7) Start the sequence again by opening the shed and throwing the shuttle to the opposite side, but be sure not to change hand positions.

Eventually, it should all become one smooth flowing movement.

Your body should stay straight and comfortable with no strain as light movements of the hands, wrists, and feet are used to operate the loom. Your eyes and attention should be focused on the fabric being woven, constantly on the lookout for flaws so that they can be corrected immediately.

Here is a good way to progress in learning to use the flyshuttle beater more efficiently.

Six steps progress:

1. Beater back.
2. Open shed (press right treadle).
3. Throw shuttle.
4. Shuttle stops.
5. Close shed (release right treadle and press the left one).
6. Beater forward.

After you feel comfortable with these, move on to the following four step progression:

1. Beater back and open shed at the same time.
2. Throw shuttle.
3. Shuttle stops.
4. Beater forward and shed closed at the same time.

Double-Box/Four-Box

With the double box and four box beaters, you pull straight down on the handle. Your body should be erect and relaxed. Move only your hand and wrist. You will soon get a "feel" for the correct wrist movement. The shuttle should stop just at the end of the shuttle box without bouncing too far back or falling short. If the shuttle bounces too far back, too much weft thread will be let out of the shuttle and a loop may form at the selvage edge. If the shuttle falls short of its goal, it will not be in the correct position for throwing the next pick. If the shuttle falls short, push it to the end with your hand.

To change shuttles on the double box and four box beaters, simply lift up and shift the control handle. The easiest position to do that is when the beater is in the position closest to you. On the four-box, there are four settings (you'll "feel" the notches).

STARTING A NEW BOBBIN

There are two methods:

- Throw the first shot by hand in the conventional manner. Hold on to the end of the thread, but instead of catching the shuttle, send it all the way to the opposite box.
- Use the flyshuttle. Before sliding the shuttle into the box, take hold of the end of the thread with the hand that would ordinarily hold the beater.

WEAVING WITH TWO OR MORE SHUTTLES ON A SINGLE BOX FLYSHUTTLE BEATER

If you are doing a weave that requires two or more shuttles to be thrown in succession and you have a single box flyshuttle beater, you will need to hand throw at least one.

But if you are doing a weave that requires the hand throwing of both or more than two shuttles, you can simply unclip the cords and handle and remove the sliding pickers so that they don't get in your way. Then use the beater as you would a standard beater. If you are weaving a wide piece in this way, you might experience difficulty in getting the shuttle through the shed without interfering with the box sides. If so, just remove the four screws from each front box side and remove them. This will give you plenty of room to work.

If you do much of this type of weaving, you should consider the double-box or four-box flyshuttle beater.

Starting Your Weaving

At the onset of weaving, first weave in one inch of a strong, medium weight weft with a tabby weave. Check the tabby weave for errors. Any errors in the threading or sleying will show up here and it is an excellent time to make corrections.

Advancing the Cloth

To advance the cloth, you simply wind it forward by using the ratchet handle while the beater is in its forward position. Make sure the fell of the cloth does not go beyond the front of the beater in order not to have to wind it backwards. This easy, rapid method of advancing the cloth makes it practical to advance the cloth about every two inches of weaving. By maintaining this two inch weaving space, the swing of the beater and the shed angle are kept more nearly constant and this makes it much easier to weave a uniform fabric.

HOW TO USE THE AUTOMATIC CLOTH ADVANCE

The AVL Automatic Cloth Advance System is an efficient means by which you can automatically advance your warp as you are weaving. It allows you to

maintain an absolutely consistent beat throughout your warp even after changing weft material.

NOTE:

Due to the fact that the picks per inch vary according to the diameter of the front cloth beam, the Cloth Storage System is highly recommended in conjunction with the Automatic Cloth Advance System.

For this reason also, a long apron should be used so that you can start your warp directly on the rear cloth storage roller.

With your loom warped and tensioned and the Automatic Advance adjusted, pull your beater forward so that it lightly contacts the front bumpers. Now bring it back so that it contacts the rear bumpers (this full swing of the beater is crucial to the proper functioning of the Automatic Advance).

Figure 36 - Overhead Beater with Automatic Advance

Adjusting Picks

The arm has three holes where the connecting rod can attach. The Beater Bracket has a long slot that the connecting rod slides up and down on. There are color coded ranges on the bracket that indicate the picks per inch (ppi) You will need to experiment to determine the correct settings for the ppi you want.

Figure 37 - Auto Advance Arm

Once you have the pick range selected on the arm, you need to fine-tune the ppi by adjusting the knob on the bracket. It will take some trial and error

to get this set correctly. The bracket has three ranges marked by strips of color – green, red, blue. The green portion at the top is for four to twelve ppi, the blue portion in the middle is for 10 to 60 ppi, and the red at the bottom is for 40 to 120 ppi.

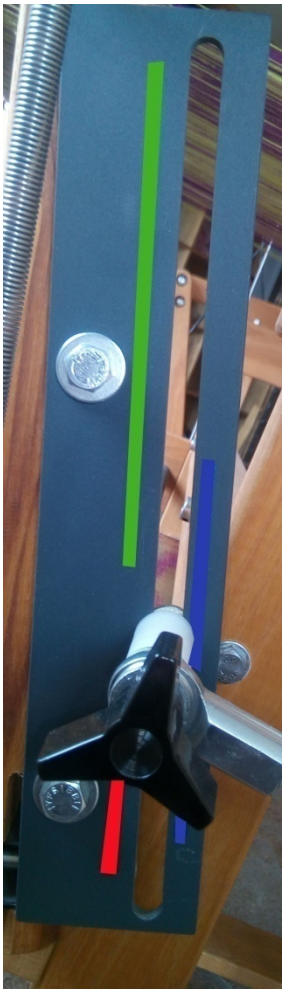

Figure 38 - Beater Bracket

For four to twelve (approximately) ppi, tighten the connecting rod end into the top hole of the Arm. Loosen the knob that secures the Connecting Rod to the Bracket. Slide the knob and Connecting Rod between the four and twelve range until it is at the ppi that you want.

For 10 - 60 (approximately) ppi, tighten the Connecting Rod end into the middle hole of the arm. Loosen the knob that secures the Connecting Rod to the Bracket. Slide the knob and Connecting Rod between the 10 and 60 range until it is at the ppi. that you want.

For 40 - 120 (approximately) ppi, tighten the Connecting Rod end into the bottom hole of the arm. Loosen the knob that secures the Connecting Rod

to the Bracket. Slide the knob and Connecting Rod between the 40 and 120 range until it is at the ppi that you want.

NOTE:
When you find your favorite ppi position, mark it on the Bracket with a colored marker.

Disengage the Auto Advance

To disengage the auto advance, snap off the plastic spacer that is on the outside of the gear housing. Push the gear rod in toward the inside of the loom. This will disengage the gears. If you want to keep the Automatic Advance disengaged, you can snap the plastic spacer onto the rod next to the small gear.

REVERSING YOUR WARP IF ADVANCED TOO MUCH

Note:
If you are using the Auto Advance System on your loom, you will need to disengage it before reversing the warp.

1) Wind the cloth storage weight to the topmost position and lock it into place.

2) Remove the pull pin (with the ring attached) near the end of the cloth storage roller. Unwind the roller and replace the pull pin.

3) Turn your breast beam back or take the fabric from underneath and bring it forward.

4) Crank the warp beam so the warp is wound back onto the beam.

5) Unlock the cloth storage weight and continue weaving.

USING THE CLOTH STORAGE ROLLER

When weaving long lengths of fabric, the material is taken around the front cloth beam and passed to the back of the loom to the cloth storage roller which can accommodate a roll up to 16” in diameter. The cloth storage system, consisting of cord, pulleys, rollers, and a weight, is designed to automatically wind the woven cloth onto the storage roller as the cloth is advanced. A looser tension is maintained on the storage roller than on the weaving. This eliminates any strain on the fabric while the special abrasive surface of the cloth beam holds the proper tension on the weaving being

done. This also makes it possible to weave long lengths of fabric that have an uneven surface which would ordinarily cause poor tension because of the uneven build up on the cloth beam.

You should have already tied the ends of your warp onto the metal rod in the apron. If so, as you weave, your fabric will automatically be wound onto the cloth storage roller. There are a few points that will help you get the most out of your cloth storage system.

Whenever you take the pin out of the cloth storage roller, you need to have the weight in its topmost position and locked. To lock the weight, simply wind the weight to the top and insert the stop pin through the rear vertical and cloth storage drum. If the weight is not locked and the cloth storage pin is removed, the weight will fall, full speed, to its bottommost position, possibly breaking things that will need to be repaired.

Before you release the weight, always check to be sure you have securely fastened the fabric to the cloth storage roller and that there isn't a lot of slack in the space between the cloth storage roller and the cloth (breast) beam.

As the weaving proceeds and the cloth is wound forward, the weight on the pulley will gradually descend. Before the weight hits bottom, wind it back up to the top using the take up drum. This will happen about every 1-1/2 to 2 yards.

REMOVING THE CLOTH FROM THE LOOM

After you've completed your weaving, use the following procedure for removing the cloth from your loom:

1) Bring the weight to its topmost position and engage the stop pin.

2) Cut your cloth off where desired and lift it off the cloth beam.

3) Manually wind the excess cloth onto the storage roller.

4) Go to the back of the loom and grasp the cloth storage roller at both ends. Lift the right side of the roller up and toward you until it disengages with the tube end on the left.

5) Once the beam is off the loom, take the cloth off the roller.

6) Replace the empty rear cloth storage roller in the loom.

ADJUSTING THE BEATER

In preparation for weaving, all AVL beaters should be adjusted in height so that the bottom half of the shed is just touching the shuttle race in the open shed position. Open a shed and raise or lower the beater by using the adjusting wing nut screws which are near the bottom of the beater legs for floor mounted beaters or near the top of the hanging arm for overhead beaters.

To open a shed on the dobby loom, press downward on the right treadle. When closing the shed on the dobby, make sure the left treadle goes all the way down. With an e-lift, turn on the e-lift and switch to single-shed mode.

Bottom swing beaters can be placed in one of three positions depending on your personal preference and/or how hard the fabric will be beaten. For a very heavy beat, the beater should be placed in its rearmost position. For a very light beat, it will be placed in its front-most position. Place the beater in one of the three positions "before" adjusting for height as above.

ADJUSTING THE SPRING LEVERS

Note:

If you have a 32 or 40 harness loom with springs only, you do not need to adjust them. If you need extra tension, you can switch to heavy-duty springs or add a second spring.

The springs of the spring lever return system should also be adjusted for positive harness return, i.e., the harnesses stay all the way down in the depressed position and require the least amount of effort for lifting. This will vary according to the weight of the warp. In general, lightweight, less dense, looser tensioned warps with a smaller weaving width will need very little spring tension to assure positive harness return. Heavier, denser, tighter tensioned, and wider warps will need more spring tension.

1) To tell if the harnesses are returning all the way, open several sheds.

2) Watch the unlifted harnesses and if the tops of their heddles become loose and tend to move around, then spring tension should be increased, but just enough to get the harnesses to stay down and no more or your treadling effort will be made greater than it has to be. Not all harnesses will need the same adjustment. It will depend on the distribution of your warp on particular harnesses.

3) To adjust the spring tension, unhook the spring and then rehook it one chain link shorter (see the assembly section for more detail). This tightens the spring and makes it pull down harder on that particular harness.

4) Test the warp again by doing some more treadling and if more spring tension is still needed, try one or more chain link less.

5) Under unusual conditions (perhaps a very tight rug warp) two springs on some or all of the harnesses may be necessary.

If all the springs are set the same, the back harnesses will have a looser tension than the front. This is because the back spring levers and their hooks are longer since the back harnesses travel farther when a shed is made. Accordingly, in some cases, the back spring levers might have to be adjusted shorter to give the same tension as the front ones. The important thing to remember is that the system is designed so that it can be "fine tuned" for each particular warp, so experiment with it. In general, for most medium tensioned warps, you will find that adjusting will not be necessary.

ADDITIONAL LOOM INFORMATION

LOOM MAINTENANCE

Tightening the Bolts

The single most important thing you can do to extend the life of your loom, and preserve its operation, is tighten the bolts that hold its frame together. These will loosen over time, due to changes in its environment and to your own creative exertions.

Lubrication and Cleaning

There are several mechanisms on your loom which will benefit from the occasional light application of an appropriate lubricant. Not all lubricants are suitable in the weaving environment. Machine oils and greases, for example can capture yarn dust and will, over time, actually impede the action of your loom.

Loom Parts	Lubrication and Cleaning
Shuttles, Shuttle Race, Single-Box Flyshuttle Picker Grooves	Paste Wax
Slide Rods (double box pickers, bobbin winder)	Steel Wool
Axles (pulleys, spring levers, overhead beater)	Silicon Spray
Warp Beam Metal Rods (where metal works against the wood frame)	Paraffin
Warp Beam Brake Drum	Sandpaper

Checking Cords and Cables

The cords and cables on your loom will wear out due to the friction of the moving parts. Check all cords and cables for wear and replace as needed.

Tension Cable

If you remove the Tension Cable, please be sure, when you reinstall it, that it is secured to the tension arm, and that the cable is drawn immediately up and around the back of the drum (x3), and that it then routes down the front of the drum where it connects to the tension tie-up. Be sure the cable does not cross over itself at any time.

Beater

You can square (or "rack") the beater by loosening the bolts that attach it to its arms. Bring the beater fully forward and retighten the bolts, while holding it firmly in place. You must have a reed in place on the Beater to make a good adjustment.

The height of the Beater can be adjusted as well. The bottom swing beater is adjusted by turning the three-pointed Knob mounted to the bracket on the Beater Support, to raise or lower the support. The overhead beater has adjustment screws at the top of the loom. You may wish to use a small level to ensure that you have made equal adjustments to both sides of the Beater.

Required Maintenance For The E-Lift

You'll need occasionally to clean the air filter, which is located on the front of the E-Lift housing. To clean, unsnap and remove the plastic baffle. Remove the foam element and carefully wash it in warm soapy water. Be sure the element is completely dry before you replace it.

Suggested Maintenance For The E-Lift

The E-Lift cables may stretch with extensive use. To adjust, simply push the cable through the Cam-Pulley and re-tie the knot to a shorter length.

Inspect the cables for wear, especially where they move over a pulley. Do this monthly if you weave regularly.

Check the supporting hardware and re-tighten if loose.

Your E-Lift is designed to provide years of dependable service. When replacement parts, such as the air filter or cables are needed, AVL is your source. AVL can also rebuild your E-Lift when it reaches the end of its wear cycle. Please contact us at 530-893-4915 or info@avlusa.com to place your order or to arrange service.

Tool Kit and Spare Parts

Here's a list of the basic, nice-to-have-around items:

1) Minimum Tools

- [ ] Socket Wrench with
  - [ ] 7/16", 1/2", 9/16" socket
- [ ] 6" or 8" Crescent Wrench
- [ ] Medium Standard Blade Screwdriver
- [ ] 4-1 Screwdriver or Medium Phillips and Standard Screwdrivers
- [ ] 1/8" Allen Wrench
- [ ] Level
- [ ] Paste Wax
- [ ] 0000 Steel Wool Pad
- [ ] 220# Sandpaper
- [ ] Paraffin Wax

2) Spare Parts You Might Consider Having

- [ ] Spare Treadle Cable (left/right)
- [ ] Spare Flyshuttle Tie-up Cord (Flyshuttle only)
- [ ] Spare Picker Returns (Flyshuttle only)
- [ ] 6' length of 350# Braided Dacron
- [ ] Cord (for emergency repairs)

TROUBLESHOOTING

Harnesses

Your AVL will have either polyester or metal heddles. The supporting harnesses (or shafts) are different for the two heddle types: metal heddles, whether twisted wire or flat steel, are suspended from rigid frames; polyester heddles are carried on transverse Harness Sticks, top and bottom. In all cases the harnesses are stabilized at the bottom by a series of spring-tensioned levers, or springs for a 32 or 40 harness loom. These hold the harnesses down and prevent your heddles from floating.

Some weavers like metal heddles because they believe they are easier to thread; others prefer the lighter and quieter polyester heddles.

On occasion you will find that one or more of your harnesses will misbehave. That is more likely to happen with harnesses with Polyester Heddles. There are a finite number of things that can cause these problems.

Symptom	**Possible Cause**	**How to Fix It**
A.) One or more top harness stick collapses; it assumes a diagonal angle and one leg of the harness cable from which it is suspended goes slack.	1.) Your heddles are bunched together towards the center of the harness or on one side only. This is a problem because the heddles are part of the harness structure.	Move a few heddles to each end of your harness sticks; just to the inside of the harness wires that connect the top and bottom sticks. That way your harnesses will be balanced.

Symptom	Possible Cause	How to Fix It
	2.) The harness cable supporting the shaft has come out of its pulleys at the top of the loom.	Trace the cable back through its pulleys in the Harness Pulley Support and make sure that the cable is properly seated. Check the action of the Dobby Cable as well. Make sure that it moves easily up and down. If the Dobby Cable seems to bind, check for debris in the hole where it comes through the Dobby Top. You may need to use a very thin piece of wire to dislodge accumulated yarn dust or other debris.
B.) The heddles float; they are lifted upwards by the warp thread when you tension the warp and your shed is not even or not large enough.	1.) The tension in your warp is greater than the tension in the springs that hold the harnesses down.	Take up a link or two in the chain that spans the Harness Spring Levers for that particular harness. Check the result and take-up more links if you feel you need more hold-down tension. Do not try to make all chains the same size. The size will depend on how much tension is required for each harness depending again on the number of threads going through that harness. For a 32 or 40 harness loom, switch to a heavy duty spring or add a second spring.
C.) One or more harnesses that are supposed to raise don't.	1.) Left treadle isn't being pressed all the way down.	Concentrate on getting both treadles all the way through their travel.
	2.) Dobby Cables out of solenoid tip slots.	Rearrange the cables according to the assembly instructions.

Symptom	Possible Cause	How to Fix It
D.) Harnesses don't raise properly.	1.) Harness cables have been hooked to the wrong harness.	Rearrange the cables.
	2.) Chains from the spring levers have been hooked to the wrong harnesses.	Rearrange the cables.
	3.) Copper hooks on the spring levers have been bent.	Straighten the hooks with pliers.
E.) Harnesses jam up on each other.	1.) Heddles are not distributed evenly over the harness sticks.	Redistribute the heddles evenly on both sides from the center of the harness sticks.
	2.) Harness wire that connects the harness sticks has jumped out and got stuck in the heddles of the other harness.	Pull the wire out, make sure it does not catch any heddles and replace it to just connect the top and the bottom harness sticks. If you have a large number of extra heddles on each side, you might want to tie them in bundles to prevent getting caught by the harness wire.

Tension

The Tension Arm Assembly consists of an arm, on which a weight slides; and a cable which travels over a plywood pulley, to a large wooden drum on your Warp Beam, and finally to an anchor bolt on the loom frame. Worked into this cable is a set of cords with a plastic lock. This is the Tension Tie-Up Adjusting Assembly.

Warp tension is established with the weight and is maintained with the tie-up.

Think of tying your shoes. When you make that first cross of laces and snug them up, you are establishing tension. If you like your shoes tight, you'll pull harder on the laces. At that point, you've set your tension. But, if you were to simply walk off without finishing the knot, you'd spend the rest of the day

re-snugging your laces. But instead you'll tie a bow — this will maintain the tension you put in the laces.

On the Tension Arm Assembly the weight does what that first part of a bow knot does — it lets you set tension. The tie-up does what the finish knot does, it keeps the tension constant.

If your tension system is working properly:

- You will have precisely the tension you want.
- The Tension Arm will ride about horizontally.
- You will feel even tension when you draw your warp forward, and
- This tension will remain constant.

Symptom	**Possible Cause**	**How to Fix It**
A.) Your Warp Beam won't hold tension, the arm is down. It doesn't matter where your weight is or how tightly you've adjusted the cord, you can't get enough tension.	1.) Your Tension Tie-Up has loosened.	Readjust the tie-up and either tie a bow in the cord ends or bind it tightly with a double wrap of cord.
	2.) You have mis-routed your brake cable. If you have just installed the system, disconnected your Brake Cable, to move the loom, or warp the beam, you may have replaced it incorrectly.	Review the cable routing as shown in the appropriate figure as shown on page 14. Be careful, there are different illustrations depending on whether your beam is in the upper or lower position.

Symptom	Possible Cause	How to Fix It
	3.) You may have warped your beam backwards. Go to your manual and consult that figure in the Weaving Section which illustrates how your warp should be routed.	If you did warp your beam backwards, you will need to reverse your tension cable. Unhook the buckle, loosen the cable, and wind it in the opposite direction. This is not a permanent fix. Use it only to weave off the warp you wound backwards.
	4.) The sandpaper on your Cloth Beam is not grabbing the warp and pulling it around as it should.	Check Symptom A in Cloth Storage System Table. If the warp still won't adhere to the Cloth Beam, you'll very likely need to add SoftGrip or another kind of beam cover in order to get satisfactory warp tension.
	5.) The surface of the Brake Drum has become polished and no longer offers sufficient friction to grab and hold the Brake Cable.	Disconnect and unwind the Brake Cable. Lightly sand the surface of the groove in the Brake Drum with your #220 sandpaper. Replace the cable (but be sure about its routing!)
B.) The tension arm rises to a steep upward angle when you advance.	1.) Your tie-up is too tight.	Loosen your tie-up.

Symptom	Possible Cause	How to Fix It
C.) The Tension Arm periodically rises and then lets go, Wham!	1.) This is a clear indication that the wood grain in the groove of the Brake Drum has become swollen. If you've had a recent elevation in humidity, it's almost surely the case. The grain has become so sticky that it won't let the cable slide smoothly over the drum.	Remove the Brake Cable and sand the raised grain with #220 sandpaper until it is again smooth to the touch. There will be two places on the drum in particular that need attention; these are where the end-grain is exposed and will be opposite one another.
D.) Your warp tension is different in different places over the width of the warp.	1.) It is not indicative of a tensioning problem. It is a matter of not having maintained even tension when warping the beam and there's no redress from the Tension Arm. It's just too late for this warp to be well tensioned.	You should have used a Tension Box for sectional warping or craft paper for plain beam warping. If you do not want to waste this warp, place something (folded paper or cloth) in the areas on the beam where your tension is looser. You will have to move your paper everytime you advance the warp and also keep adding more since it will probably become looser and looser.
E.) Excessive tension on the warp.	1.) Weight on the tension arm is in a too far out position.	Adjust the position of your weight on the tension arm.
	2.) Too much weight on the tension arm.	Use a smaller weight on the tension arm.
	3.) The tension rope has gotten crossed over itself on the warp beam brake drum.	Straighten out the rope.

Cloth Storage

Symptom	Possible Cause	How to Fit It
A.) The cloth isn't moving backwards onto the Storage Roller.	1.) The weight is on the floor and is no longer pulling on the cord, so there's no energy left to roll cloth onto the Storage Roller.	Wind the weight to the top position. If the weight does not want to stay in the top position, check if you forgot to insert the pull pin when you last had the Cloth Storage Roller off or the pin has fallen out. Replace the pin.

Shed

AVLs are designed with a shed which exactly meets the need; not too wide, not too narrow. Of course there's a reason for this precision. Raising harnesses higher than you need may give you a larger shed, but it's also a waste of time and effort. You only need enough warp separation for the shuttle to pass freely. However, because the shed on AVLs is so precisely calibrated, you do need to be sure that you're getting all that the loom can deliver. There are three likely causes for restricted sheds:

Symptom	Possible Cause	How to Fix It
A.) Restricted Sheds	1.) Shuttle Race is too high or low. When your beater is pushed all the way away from you, your warp threads should just be gently touching the race.	If the race is too high, you'll need to lower it. If you see a gap between the bottom of the warp and the top of the race, bring it up! On the overhead beaters, there is an adjustment screw at the top of the beater hanging arm. On the bottom swing beater, there is a same kind of adjustment screw, but at the bottom of the beater.
	2.) Treadle cables fell off the pulleys.	Replace the treadle cables so they go over the pulleys.

Symptom	Possible Cause	How to Fix It
	3.) Dobby Cable Turnbuckle is out of adjustment.	You'll need a helper to check this. Have your helper watch the travel of the Dobby Slide Plate while you treadle the loom. Do not have any harnesses engaging. The slide plate should travel all the way to the top of the rods and to the bottom. If it does not go all the way to the bottom, you'll need to tighten or loosen the turnbuckle at the side of the loom.
	4.) e-Lift is out of adjustment.	Call AVL.

Beaters and Flyshuttles

Symptom	Possible Cause	How to Fix It
A.) Shuttle flying off the track.	1.) Shuttle boxes are out of adjustment.	a.) Single Box Flyshuttle: Bridge the Shuttle Race and Shuttle Box with a ruler or other straight edge. They should be in perfect alignment. If one is lower than the other, loosen the Shuttle Box and reposition it. If you need help, go to the installation instructions in your manual.

Symptom	Possible Cause	How to Fix It
		b.) Double-Box: In the same way, check the position of each of your shelves relative to the race. If you have a problem, make the necessary adjustment at the turnbuckle in the cable that attaches to the shift handle; bring the shelves up or down. You may need to loosen the brass screws (motion limiters) top and bottom of the box carriages in order to create enough room to make this adjustment. Be sure to retighten them once you've corrected the elevation problem.
		c.) Four-Box: Check the positioning of the shelves relative to the race. Adjust the shelves with the turnbuckle as described in the Assembly Manual. Contact AVL if you continue to have problems.
	2.) Your shuttle is hitting the end of the reed.	Insert small shims in the grooves that hold the reed into the race and beater top so that the end of the reed is deflected backwards.
	3.) Tensioner in your shuttle is not adjusted.	The advantage of an end-feed shuttle is that it allows you to tension the feed of your yarn. Most shuttles of this design have adjustable tensioners. Be sure yours is set to match the characteristics of the yarn used.
	4.) Bobbins not wound consistently.	If it's soft on the end and the wraps collapse and pull into one another, you will have to wind it again. Use an AVL Bobbin-Winding Guide.

Symptom	Possible Cause	How to Fix It
B.) One side of your fabric is beaten more tightly than the other even if you are holding your beater in the middle. You have a diagonal beat line rather than horizontal.	1.) Your beater is out of alignment.	To check, push your beater all the way back against the Beater Bumper Blocks, it should strike both sides at exactly the same time. If it doesn't, you'll need to rack the beater.

Dobby

Symptom	Possible Cause	How to Fix It
A.) Dobby skips.	1.) Pressing too hard or too quickly on the treadles.	Press the treadles with a smooth, rhythmical motion.
	2.) Cable turnbuckle out of adjustment.	Adjust according to the assembly instructions.
B.) Dobby slide plate jams.	1.) Left treadle out of adjustment.	Check routing of left treadle cable. Make sure it is still in the pulley with keeper inside the Compu-Dobby box.

Left Treadle Issues

If you do not fully depress the Left Treadle each time you lift, you will experience problems with your harnesses. Because the Left Treadle is unweighted, it’s easy to forget that you need to do this. However, this treadle does something very important — it releases the harnesses that were engaged for the previous pick, but only in the last fraction of its stroke. So, if you seem to be experiencing harness lifting problems, your use of the Left Treadle is the first thing to suspect.

THE FINE PRINT

AVL CUSTOMER SERVICE

AVL offers free technical support to the original owner of all our looms. This means if you ever have a problem, you can call, fax, or e-mail us and we'll help you find a solution. Please take advantage of this service; your satisfaction is extremely important to us.

Customer Service Phone: (530 893-4915)
Fax: (530) 893-1372
E-Mail: sales@avlusa.com

AVL WARRANTIES

Your loom carries a full warranty on parts and labor for two years from the date we ship it to you. Your Compu-Dobby is fully warranted for two years. If a part wears or breaks during this period, we will replace or repair it at our discretion, but at no charge to you.

AVL Returns Policy

All goods, excepting software, may be returned for refund within thirty (30) days of the shipping date.

A 15% restocking fee will be assessed for all but defective items.

AVL will pay all shipping costs for defective items within the continental United States for the entire warranty period. Special provisions apply for the return of looms (please contact your sales person for more information).

AVL will generally return repair or replacement items via UPS Ground service. Additional charges for expedited shipping are the responsibility of the customer.

NOTICE TO USERS IN THE EUROPEAN UNION

Products bearing the CE mark are in conformity with the protection requirements of EC Council directives 2004/108/EC, 2006/95/EC, 1999/5/EC, and 2009/125/EC on the approximation and harmonization of the laws of the Member States relating to electromagnetic compatibility, safety of electrical equipment designed for use within certain voltage limits, radio equipment and telecommunications terminal equipment and on the ecodesign of energy-related products.

Compliance is indicated by the CE marking.

The manufacturer of this product is: AVL Looms, Inc., 2360 Park Avenue, Chico, CA 95928 USA. A declaration of conformity to the requirements of the Directives is available upon request from the Authorized Representative. This product satisfies the Class B limits of EN 55022 and safety requirements of EN 60950.

Barclay-Phelps

CE MARKING SPECIALISTS

Hoi Yuen Road, Kwun Tong, Kowloon, Hong Kong

CERTIFICATE & DECLARATION OF CONFORMITY FOR CE MARKING

Company contact details:
AVL Looms, Inc., 2360 Park Avenue, Chico, CA 95928, USA
Tel: 530-893-4915 Fax: 530-893-1372

AVL Looms, Inc. declares under their sole responsibility that their:
Textile Producing Looms listed as follows

A-Series Looms with the following part numbers:
A30-8H-CD4, A30-16H-CD4, A30-24H-CD4, A30-32H-CD4-E, A30-40H-CD4-E, A40-8H-CD4,A40-16H-CD4, A40-24H-CD4, A40-32H-CD4-E, A40-40H-CD4-E, A48-8H-CD4, A48-16H-CD4, A48-24H-CD4, A48-32H-CD4-E, A48-40H-CD4-E, A60-8H-CD4, A60-16H-CD4, A60-24H-CD4, A60-32H-CD4-E, A60-40H-CD4-E, A72-8H-CD4, A72-16H-CD4, A72-24H-CD4, A72-32H-CD4-E, A72-40H-CD4-E

V-Series Looms with the following part numbers:
V30-16H-CD4-E, V30-24H-CD4-E, V30-32H-CD4-E, V30-40H-CD4-E,V40-16H-CD4-E, V40-24H-CD4-E, V40-32H-CD4-E, V40-40H-CD4-E

SDL looms with the following part numbers
2010, 2030, 2010-30, 2030-30
(where the 2010 is a 20" weaving width with 16 frames, the 2030 is a 20" weaving width with 24 frames, the 2010-30 is a 30" width with 16 frames and the 2030-30 is a 30" width with 24 frames)

Workshop Dobby Looms with the following part numbers:
3010, 3020, 3030, 3040, 3050, 3060 (where the 3010 is a 16" weaving width with 8 frames, 3020 is 16" with 16 frames, 3030 16" with 24 frames, 3040 is 24" with 8 frames, 3050 is 24" with 16 frames and 3060 is 24" with 24 frames)

comply with the Essential Requirements of the following EU Directives:
Machinery Directive 2006/42/EC Low Voltage Directive 2014/35/EU EMC Directive 2014/30/EU
Radio Equipment Directive 2014/53/EU RoHS 2 Directive 2011/65/EU

and further conform with the following EU Harmonized Standards as applicable:
EN ISO 11111-1:2016 EN ISO 4414:2010 EN 60204-1:2006 + A1:2009
EN 61000-6-3:2007+A1:2011 EN 61000-6-1:2007 EN 300 328 V2.1.1

Dated: 16 June 2017 **Position of signatory:** President **Name of Signatory:** Theodore Kruger
Signed below:
on behalf of AVL Looms, Inc.